CDP-C20/C26/C30

SERVICE MANUAL

US Model
CDP-C20/C26/C30

Canadian Model
CDP-C30

Photo : CDP-C30

SPECIFICATIONS

Compact disc player

System: Compact disc digital audio system
Laser: Semiconductor laser (λ = 780 nm)
Emission duration: continuous
Laser output: Max. 44.6 μW *
* This output is the value measured at a distance of about 200 mm from the objective lens surface on the Optical Pick-up Block.
Frequency response: 2 Hz – 20 kHz (+1 dB, −2 dB)
Signal to noise ratio: More than 100 dB
Dynamic range: More than 88 dB
Harmonic distortion: Less than 0.05% (1 kHz)
Channel separation: More than 95 dB (1 kHz)
Wow and flutter: Below measurable limit
Outputs: LINE OUT (phono jacks)
Output level 2 V (at 50 kilohms)
Load impedance over 10 kilohms
HEADPHONES (stereo phone jack)
(CDP-C30, C20 only)
Output level 0 – 2.4 mW (variable)
(at 32 ohms)

General

Power requirements: 120 V AC, 60 Hz
Power consumption: 10 W
Dimensions: Approx. 430 × 110 × 400 mm (w/h/d)
(17 × 4 3/8 × 15 3/4 inches)
not including projecting parts and controls
Weight: Approx. 5.8 kg (12 lbs 13 oz), net

Remote commander (supplied only for the CDP-C30, C26)

Remote control system: Infrared control
Power requirements: 3 V DC with two size AA (R6) batteries
Dimensions: Approx. 43 × 20 × 175 mm (w/h/d)
(1 11/16 × 13/16 × 6 15/16 inches)
Weight: Approx. 110 g (4 oz)
including batteries

Supplied accessories

Audio signal connecting cord
(phono plug × 2 ⟷ phono plug × 2) (1)
CDP-C30, C26 only:
Sony SUM-3 (NS) batteries (2)

Design and specifications subject to change without notice.

SAFETY-RELATED COMPONENT WARNING!!

COMPONENTS IDENTIFIED BY MARK ⚠ OR DOTTED LINE WITH MARK ⚠ ON THE SCHEMATIC DIAGRAMS AND IN THE PARTS LIST ARE CRITICAL TO SAFE OPERATION. REPLACE THESE COMPONENTS WITH SONY PARTS WHOSE PART NUMBERS APPEAR AS SHOWN IN THIS MANUAL OR IN SUPPLEMENTS PUBLISHED BY SONY.

ATTENTION AU COMPOSANT AYANT RAPPORT À LA SÉCURITÉ!

LES COMPOSANTS IDENTIFIÉS PAR UNE MARQUE ⚠ SUR LES DIAGRAMMES SCHÉMATIQUES ET LA LISTE DES PIÈCES SONT CRITIQUES POUR LA SÉCURITÉ DE FONCTIONNEMENT. NE REMPLACER CES COMPOSANTS QUE PAR DES PIÈCES SONY DONT LES NUMÉROS SONT DONNÉS DANS CE MANUEL OU DANS LES SUPPLÉMENTS PUBLIÉS PAR SONY.

COMPACT DISC PLAYER

SONY®

TABLE OF CONTENS

Section	Title	Page
SECTION 1 GENERAL		
1-1.	Location and Function of Controls	3
SECTION 2 DISASSEMBLY		
2-1.	Front Panel (A)	4
2-2.	Front Panel (B)	4
SECTION 3 ELECTRICAL ADJUSTMENTS		5
SECTION 4 DIAGRAMS		
4-1.	IC Block Diagrams	7
4-2.	Circuit Boards Location	9
4-3.	Semiconductor Lead Layouts	9
4-4.	Printed Wiring Boards	10
4-5.	Schematic Diagram	13
SECTION 5 EXPLODED VIEWS		
5-1.	Cabinet Section	17
5-2.	Disc Table Section	18
5-3.	Frame Section	19
5-4.	Optical Pick-Up Block (BU-5C)	20
SECTION 6 ELECTRICAL PARTS LIST		21

SAFETY CHECK-OUT

After correcting the original service problem, perform the following safety check before releasing the set to the customer:
Check the antenna terminals, metal trim, "metallized" knobs, screws, and all other exposed metal parts for AC leakage. Check leakage as described below.

LEAKAGE TEST

The AC leakage from any exposed metal part to earth ground and from all exposed metal parts to any exposed metal part having a return to chassis, must not exceed 0.5 mA (500 microampers). Leakage current can be measured by any one of three methods.

1. A commercial leakage tester, such as the Simpson 229 or RCA WT-540A. Follow the manufacturers' instructions to use these instruments.
2. A battery-operated AC milliammeter. The Data Precision 245 digital multimeter is suitable for this job.
3. Measuring the voltage drop across a resistor by means of a VOM or battery-operated AC voltmeter. The "limit" indication is 0.75 V, so analog meters must have an accurate low-voltage scale. The Simpson 250 and Sanwa SH-63Trd are examples of a passive VOM that is suitable. Nearly all battery operated digital multimeters that have a 2 V AC range are suitable. (See Fig. A)

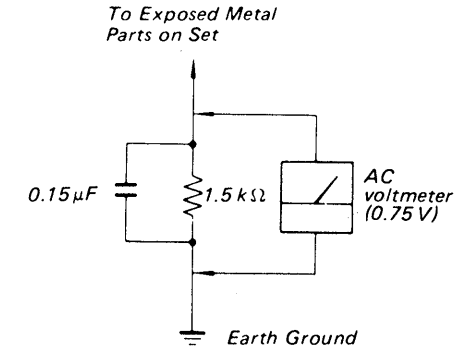

Fig. A. Using an AC voltmeter to check AC leakage.

SERVICING NOTE

NOTES ON HANDLING THE OPTICAL PICK-UP BLOCK OR BASE UNIT

The laser diode in the optical pick-up block may suffer electrostatic breakdown because of the potential difference generated by the charged electrostatic load, etc. on clothing and the human body.
During repair, pay attention to electrostatic breakdown and also use the procedure in the printed matter which is included in the repair parts.
The flexible board is easily damaged and should be handled with care.

CAUTION

Use of controls or adjustments or performance of procedures other than those specified herein may result in hazardous radiation exposure.

NOTES ON LASER DIODE EMISSION CHECK

The laser beam on this model is concentrated so as to be focused on the disc reflective surface by the objective lens in the optical pick-up block. Therefore, when checking the laser diode emission, observe from more than 30 cm away from the objective lens.

SECTION 1
GENERAL

1-1. LOCATION AND FUNCTION OF CONTROLS

Front Panel

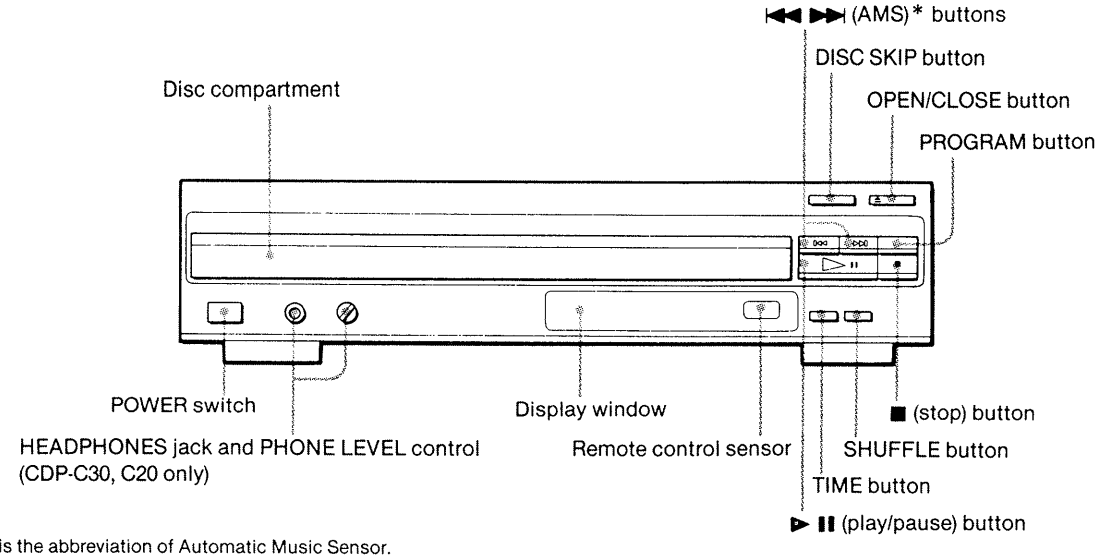

* AMS is the abbreviation of Automatic Music Sensor.

Remote Commander (CDP-C30, C-26 only)

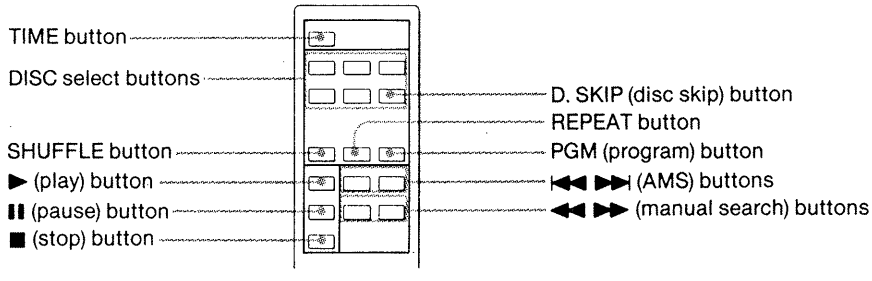

Following functions are operated only by using the remote commander.

Direct disc selection
You can select a dics directly only by pressing a numeric button on the remote commander.

Manual search
You can locate a particular point in a selection by pressing the ◀◀ or ▶▶ button on the remote commander.

Repeat play
You can play your programmed selections or all the discs by pressing the REPEAT button on the remote commander.

	CDP-C30	CDP-C26	CDP-C20 using the remote commander supplied with the Sony stereo systems.
Direct disc selection	O	O	X
Manual search	O	O	X
Repeat play	O	O	O

O: possible X: not possible

Notes on the remote commander and remote control operation
- Keep the commander away from extremely hot or humid places.
- Avoid dropping any foreign objects into the commander casing, particularly when replacing the batteries.
- To avoid a malfunction, do not simultaneously depress two or more buttons.
- Avoid exposure of the remote control sensor to direct sunlight or lighting apparatus. Such exposure can cause a malfunction.

SECTION 2
DISASSEMBLY

NOTE: Follow the disassembly procedure in the numerical order given.

2-1. FRONT PANEL (A)

❶ Remove top cover.
❷ Press POWER switch to turn the power on.
❸ Press OPEN/CLOSE button to open disc table.

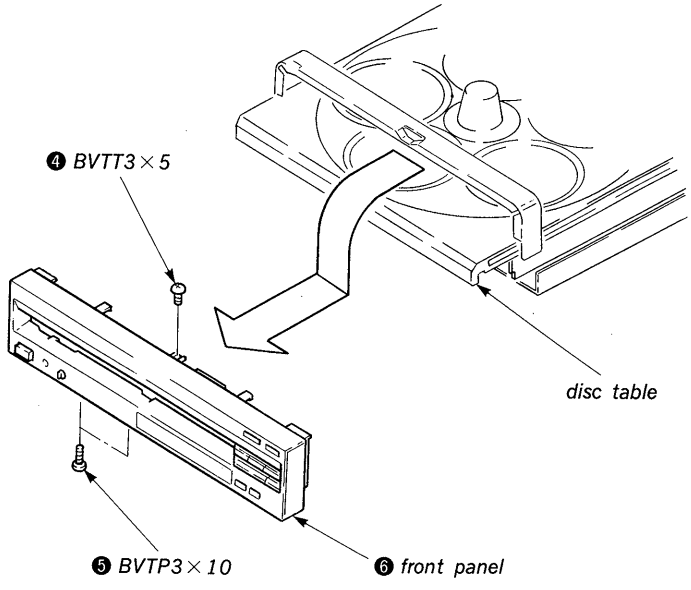

2-2. FRONT PANEL (B)

❶ Remove top cover.
❸ Perform steps A-4 to A-6.

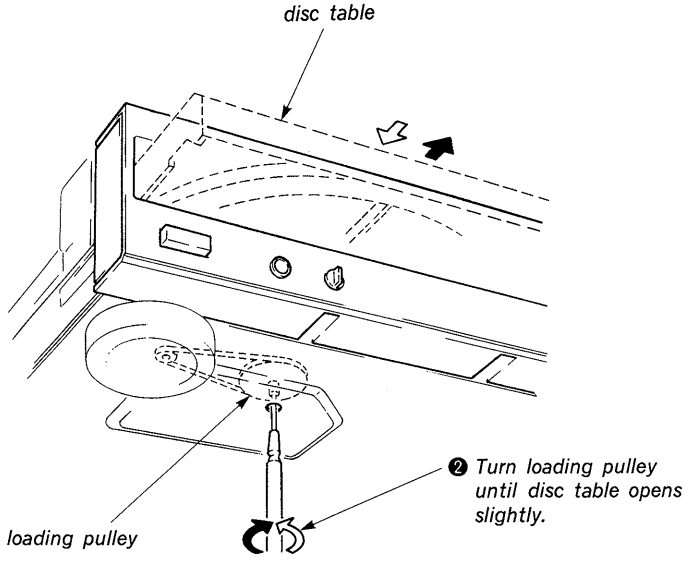

SECTION 3
ELECTRICAL ADJUSTMENTS

1. Perform adjustments in the order given.
2. Use YEDS-18 (Part No: 3-702-101-01) disc unless otherwise indicated.
3. Use the oscilloscope with more than 10 MΩ impedance.

RF PLL Frequency Adjustment/Lock Frequency Check

Procedure:

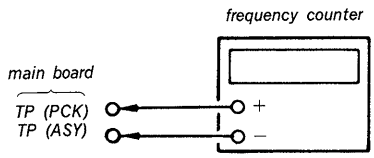

1. Connect test point TP (ASY) to ground with lead wire.
2. Turn POWER switch on.
3. Connect the frequency counter to test point TP (PCK).
4. Adjust RV5 so that the reading on frequency counter is 4.3218MHz±30kHz.
   ..... (RF PLL frequency adjustment)
5. Remove lead wire connecting TP (ASY) to ground.
6. Put disc (YEDS-18) in and press ▷ PLAY button.
7. Confirm that the reading on frequency counter is 4.3218MHz.
   ..... (Lock frequency check)

E-F Balance Adjustment

This adjustment should be made when replacing TOP (T-type Optical Pick-up).

Procedure:

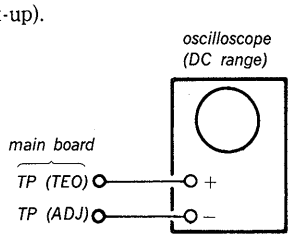

1. Connect test point TP (ADJ) and test point TP (TES) to ground with lead wire.
2. Connect oscilloscope to test point TP (TEO).
3. Turn POWER switch on.
4. Put disc (YEDS-18) in and press ▷ PLAY button.
5. Adjust RV1 so that the traverse waveform is symmetrical above and below.
6. After adjustment, remove the lead wire connected in step 5.

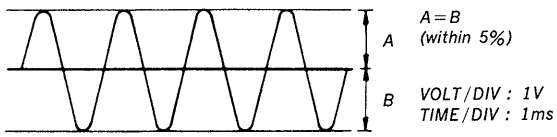

Focus Bias Adjustment

This adjustment should be made when replacing TOP (T-type Optical Pick-up).

Procedure:

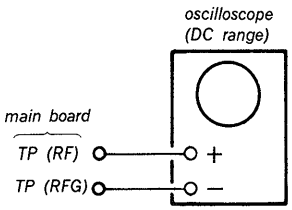

1. Connect oscilloscope to test point TP (RF) and test point TP (RFG).
2. Turn POWER switch on.
3. Put disc (YEDS-18) in and press ▷ PLAY button.
4. Adjust RV2 for an optimum waveform eye pattern or so that the peak is maximum. Optimum eye pattern means that shape "◇" can be clearly distinguished at the center of the waveform.

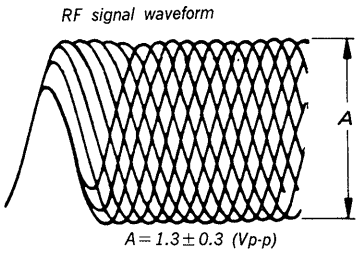

REFERENCE

Focus/Tracking Gain Adjustments

A frequency responce analyzer is necessary in order to perform this adjustment exactly.

However, this gain has a margin, so even if it is slightly off, there is no problem. Therefore, do not perform this adjustment.

Focus/tracking gain determines the pick-up follow up (vertical and horizontal) relative to mechanical noise and shock when the 2-axis device operate.

However, as these reciprocate, the adjustment is at the point where both are satisfied.

- When gain is raised, the noise when the 2-axis device operates increases.
- When gain is lowered, mechanical shock and skipping occurs more easily.
- When gain adjustment is off, the symptoms below appear.

Symptoms \ Gain	Focus	Tracking
• The time until music starts becomes longer for ■ STOP → ▷ PLAY or automatic selection. (⏮, ⏭ buttons pressed.) (Normally takes about 1 seconds.)	low	low or high
• Music does not start and disc continues to rotate for ■ STOP → ▷ PLAY or automatic selection. (⏮, ⏭ buttons pressed.)	–	low
• Disc table opens shortly after ■ STOP → ▷ PLAY.	low or high	–
• Sound is interrupted during PLAY or time counter display stops progressing.	–	low
• More noise during 2-axis device operation.	high	high

The following is a simple adjustment method.

—Primary Adjustment—

Note : Since exact adjustment cannot be performed, remember the positions of the controls before performing the adjustment. If the position after the primary adjustment are only a little different, return the controls to the original position.

Procedure :

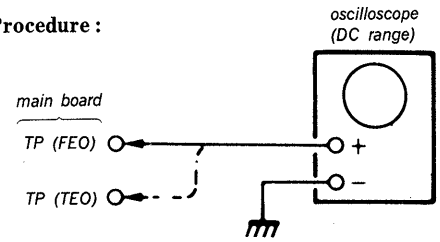

1. Keep the set horizontal.
   (If the set is not horizontal, this adjustment cannot be performed due to the gravity against the 2-axis device.)
2. Insert disc (YEDS-18 : Fifth Selection) and press ▷ PLAY button.
3. Connect oscilloscope to main amp board TP (FEO).
4. Adjust RV3 so that the waveform is as shown in the figure below. (focus gain adjustment)

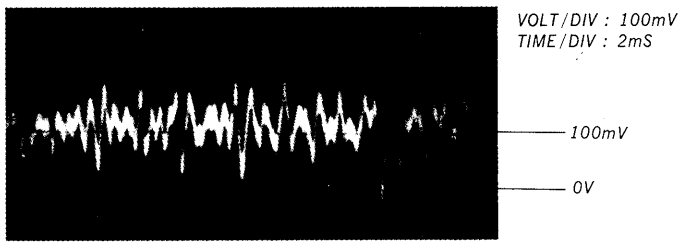

• Incorrent Examples (DC level changes more than on adjusted waveform)

low focus gain

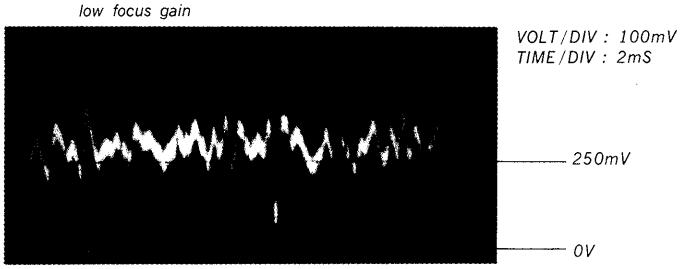

high focus gain

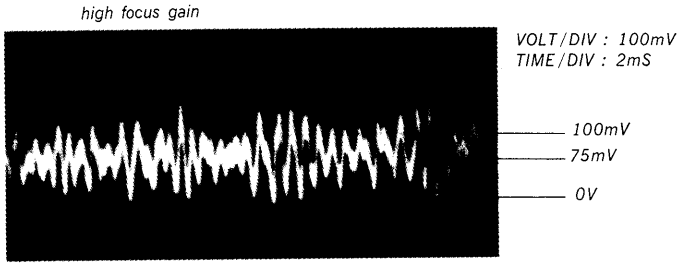

5. Connect oscilloscope to main board TP (TEO).
6. Adjust RV4 so that the waveform is as shown in the figure below. (tracking gain adjustment)

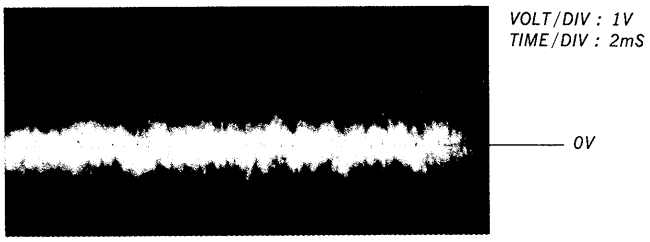

• Incorrect Examples (fundamental wave appears)

low tracking gain

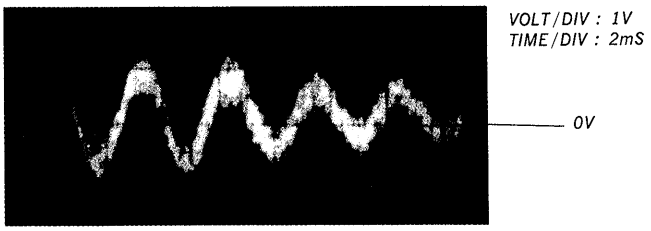

high tracking gain
higher fundamental wave than for low gain)

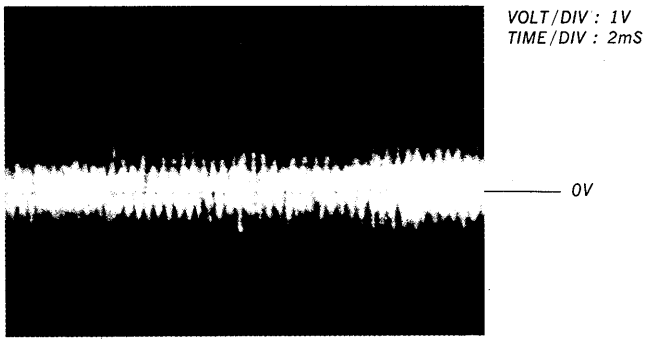

Adjustment Location : main board

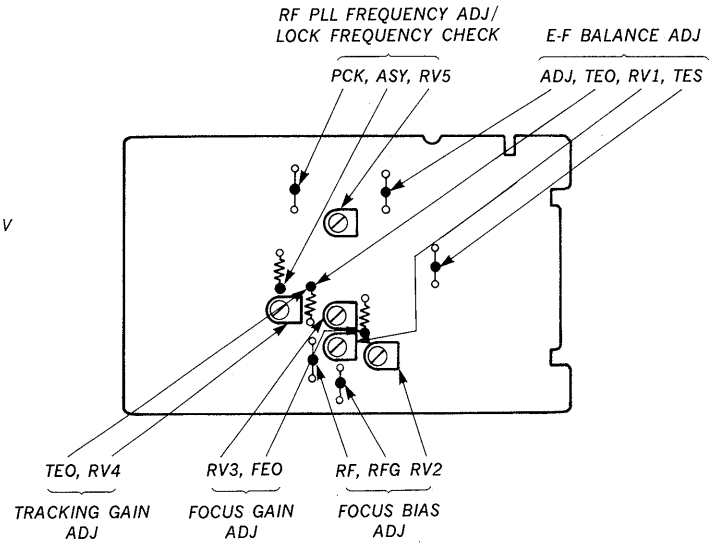

SECTION 4
DIAGRAMS

4-1. IC BLOCK DIAGRAMS

IC1 CXA1081S

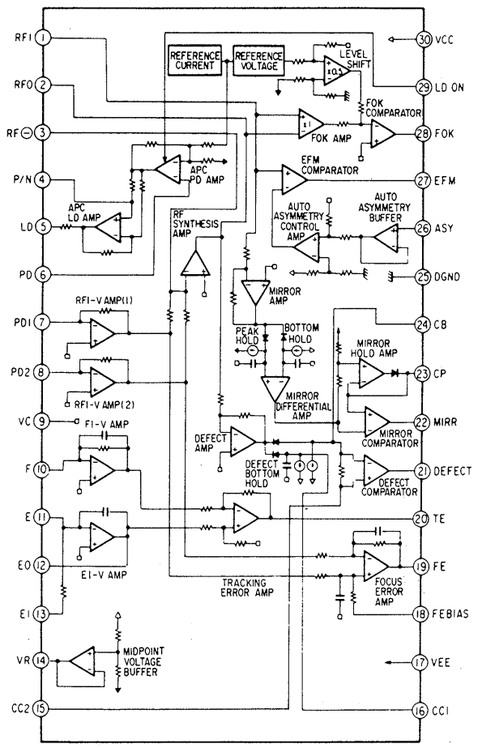

IC201 CXD1161P

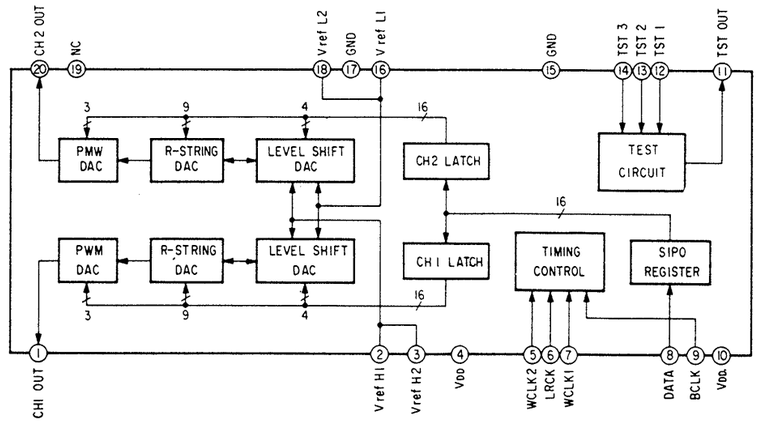

IC2 CXA1182S

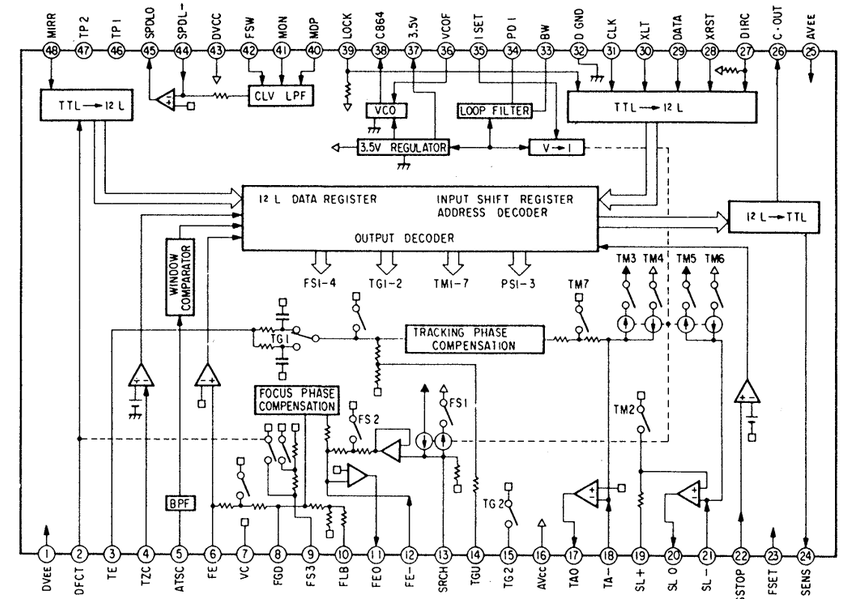

IC9 M5294P

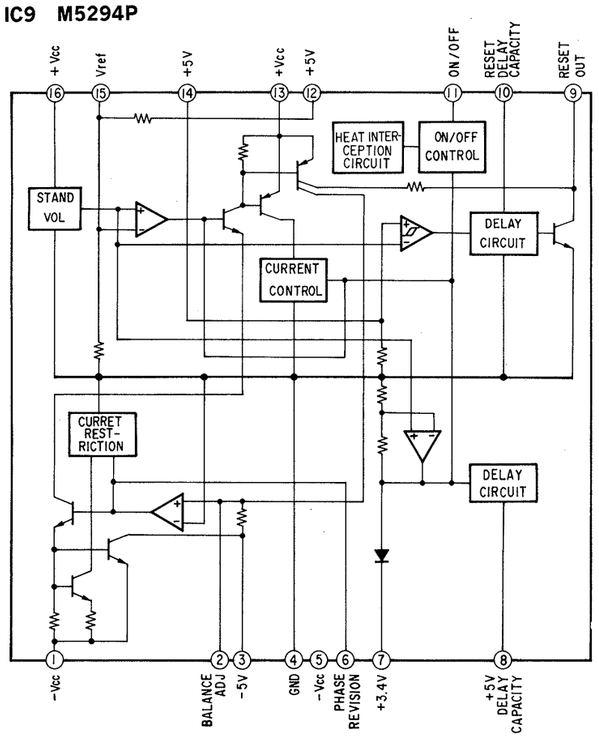

IC15 LC9600R-144

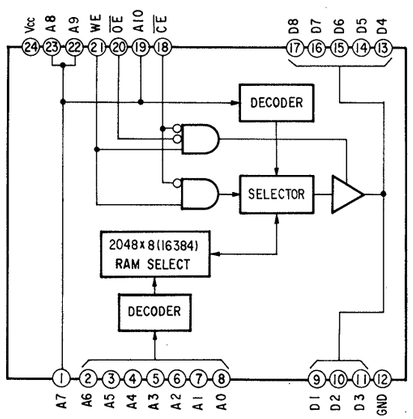

4-2. CIRCUIT BOARDS LOCATION

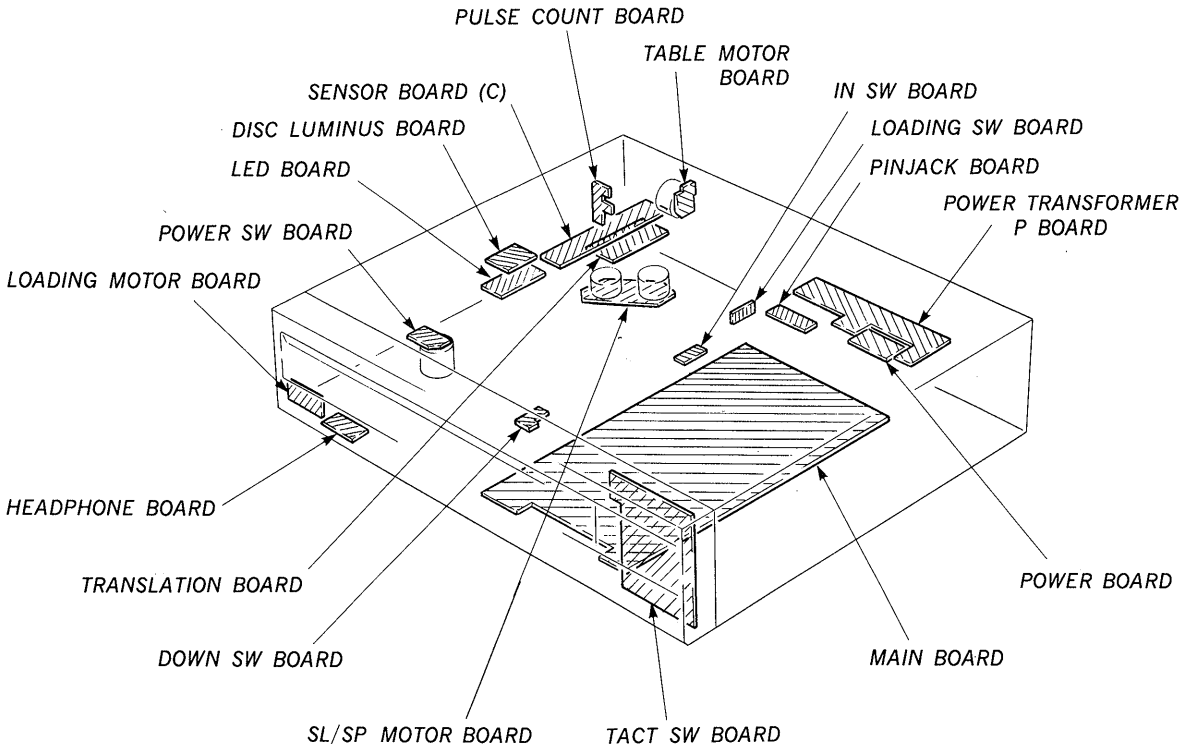

4-3. SEMICONDUCTOR LEAD LAYOUTS

CXA1081S

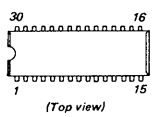

CXD1161P-2
M5204P

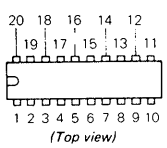

μPD75208CW-232

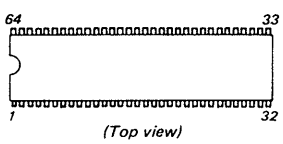

2SB731

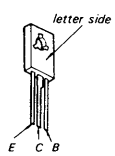

RD6.8ES-B3

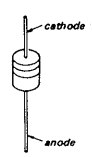

CXA1182S

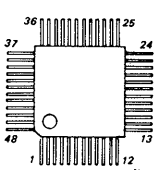

CXK5816M-101

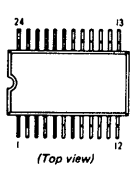

BN1L4M
2SA1175

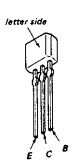

2SB1013
2SC3623-L

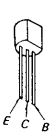

US1060M
10E2N

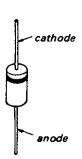

CXA1291P

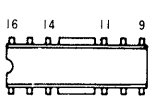

MSM6408-32SS

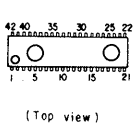

DTA144ES
DTC114ES
DTC124ES

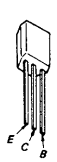

GP1A51HR

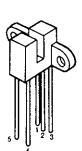

SRA-989A-1

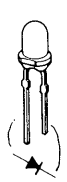

CXD1130Q

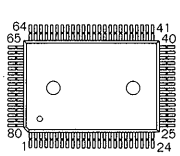

M5294P

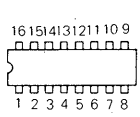

GR1A521

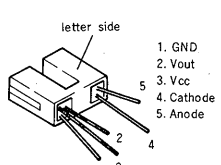

CDP-C20/C26/C30 CDP-C20/C26/C30

4-4. PRINTED WIRING BOARDS

• See page 9 for Circuit Boards Location and Semiconductor Lead Layouts.

• **Semiconductor Location**

Ref. No.	Location	Ref. No.	Location
D1	F-18	Q3	F-13
D2	E-18	Q7	B-13
D3	E-18	Q8	B-13
D4	E-18	Q16	D-11
D11	G-14	Q20	A-9
D601	D-10	Q201	C-17
D602	D-18	Q221	A-17
D604	E-17	Q251	A-18
D605	D-18	Q601	C-18
D606	F-10	Q602	C-19
D607	J-11	Q603	D-13
D608	D-12	Q604	G-10
D609	C-18	Q606	I-15
D610	B-10		
D611	B-9		
D613	J-15		
D615	B-9		
IC1	F-15		
IC2	D-14		
IC3	C-16		
IC8	B-12		
IC9	F-17		
IC10	C-11		
IC11	F-10		
IC12	F-11		
IC15	C-17		
IC201	A-16		
IC202	B-17		
IC605	I-18		

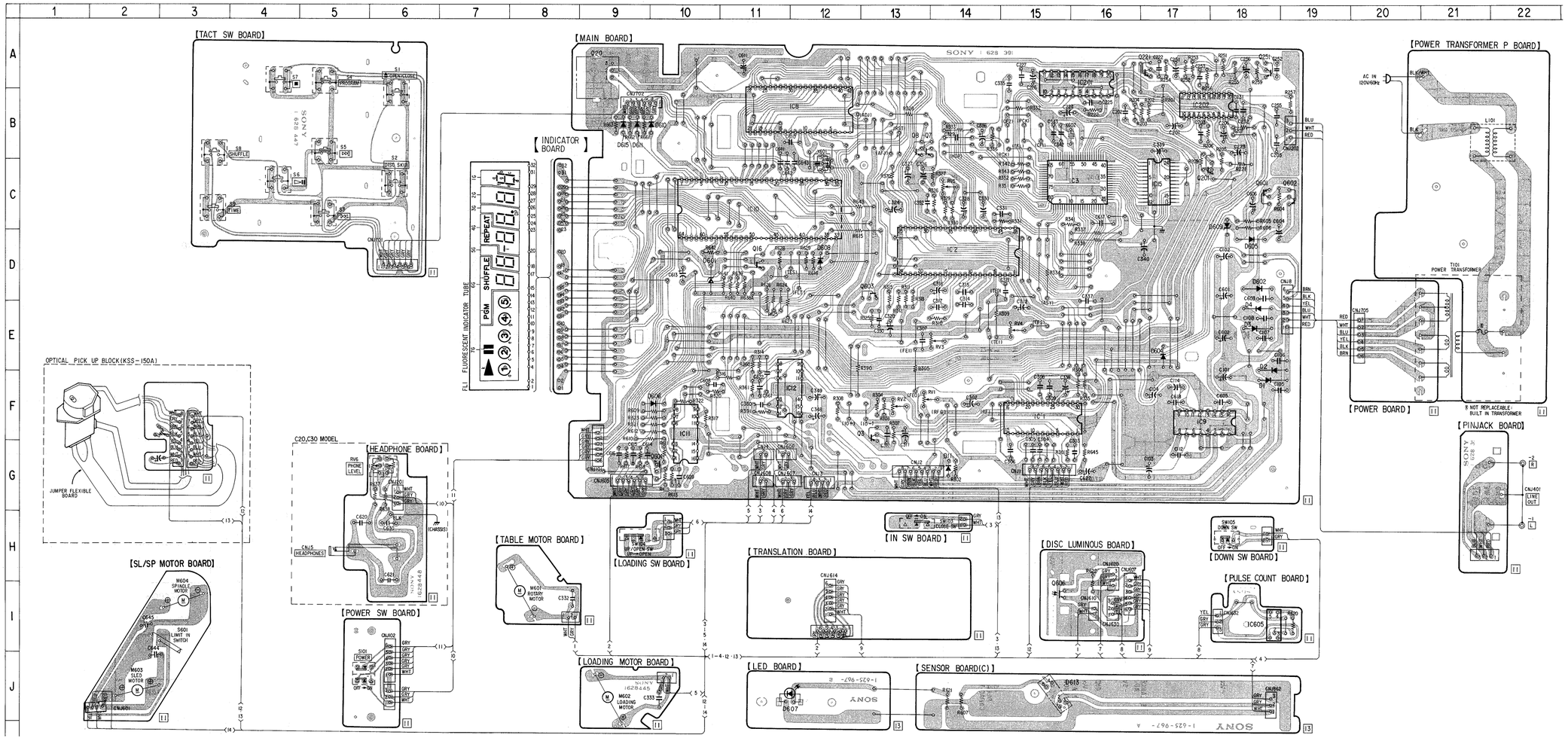

Note:

- ○—— : parts extracted from the component side.
- ⊡ indicates side identified with part number.
- ○—+—○ : Jumper wire connected to the ground pattern on the component side.

4-5. SCHEMATIC DIAGRAM

• See page 7 for IC block diagrams.

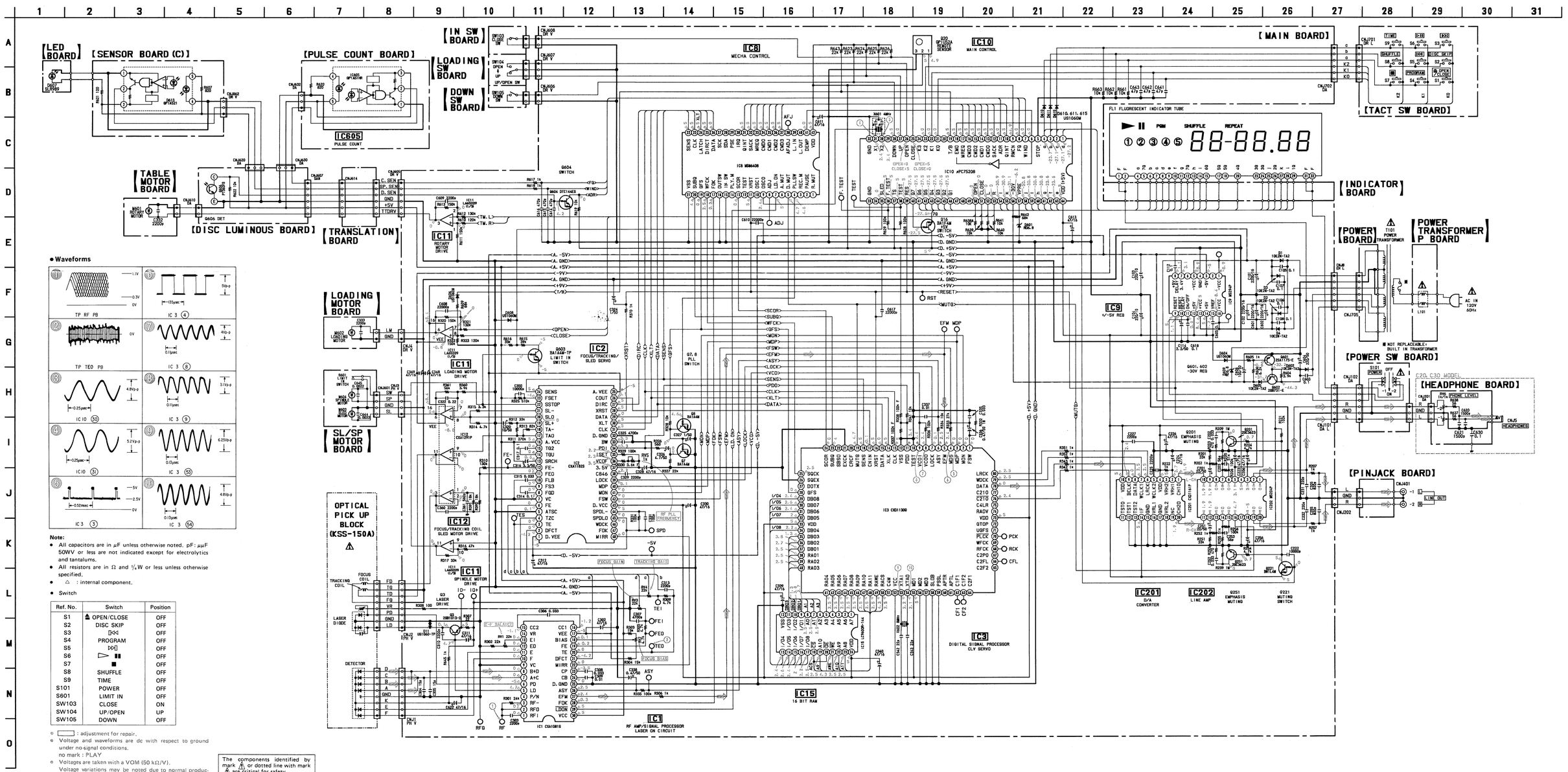

• Waveforms

Note:

- All capacitors are in μF unless otherwise noted. pF: μμF 50WV or less are not indicated except for electrolytics and tantalums.
- All resistors are in Ω and ¼W or less unless otherwise specified.
- △ : internal component.
- Switch

Ref. No.	Switch	Position
S1	⏏ OPEN/CLOSE	OFF
S2	DISC SKIP	OFF
S3	⏮	OFF
S4	PROGRAM	OFF
S5	⏭	OFF
S6	▷ ❚❚	OFF
S7	■	OFF
S8	SHUFFLE	OFF
S9	TIME	OFF
S101	POWER	OFF
S601	LIMIT IN	OFF
SW103	CLOSE	ON
SW104	UP/OPEN	UP
SW105	DOWN	OFF

- ▭ : adjustment for repair.
- Voltage and waveforms are dc with respect to ground under no-signal conditions.
  no mark : PLAY
- Voltages are taken with a VOM (50 kΩ/V).
  Voltage variations may be noted due to normal production tolerances.
- Waveforms are taken with a oscilloscope.
  Voltage variations may be noted due to normal production tolerances.
- Circled numbers refer to waveforms.
- Signal path.
  ⇒ : CD

The components identified by mark ⚠ or dotted line with mark ⚠ are critical for safety. Replace only with part number specified.

Les composants identifiés par une marque ⚠ sont critiques pour la sécurité. Ne les remplacer que par une pièce portant le numéro spécifié.

SECTION 5
EXPLODED VIEWS

NOTE:

- The mechanical parts with no reference number in the exploded views are not supplied.
- The construction parts of an assembled part are indicated with a collation number in the remark column.
- Items marked "★" are not stocked since they are seldom required for routine service. Some delay should be anticipated when ordering these items.
- Due to standardization, parts with part number suffix -XX and -X may be different from the parts specified in the components used on the set.
- Color Indication of Appearance Parts Example:
  (RED) . . . KNOB, BALANCE (WHITE)
  ↑ Cabinet's Color ↑ Parts Color

The components identified by mark ⚠ or dotted line with mark ⚠ are critical for safety.
Replace only with part number specified.

Les composants identifiés par une marque ⚠ sont critiques pour la sécurité.
Ne les remplacer que par une pièce portant le numéro spécifé.

5-1. CABINET SECTION

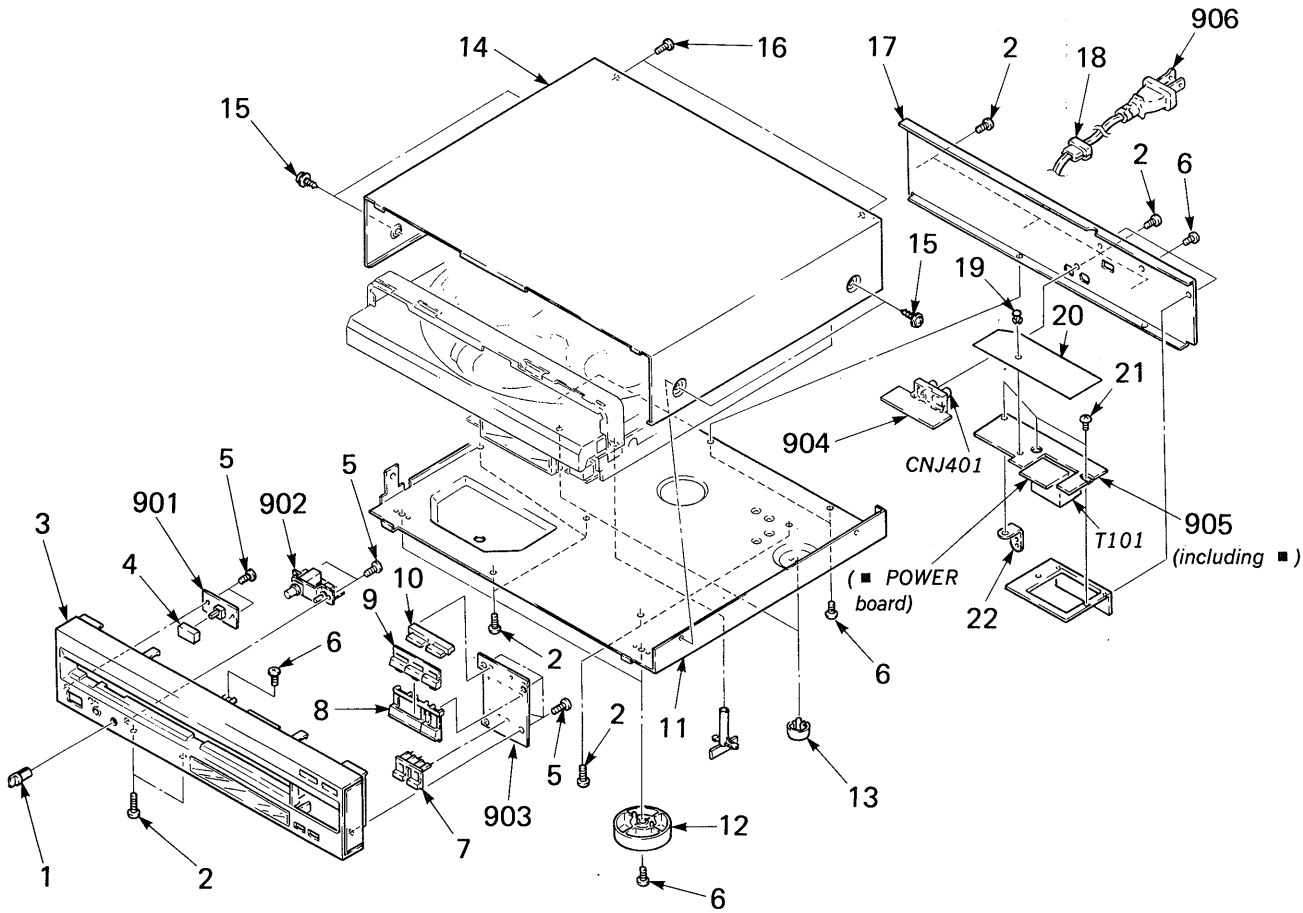

Ref.No	Part No.	Description	Remarks
1	4-923-522-01	(EXCEPT FOR C26)....KNOB (B.TYPE), LOV	
2	7-685-647-79	SCREW +BVTP 3X10 TYPE2 N-S	
3	X-4924-424-1	(C30)....PANEL ASSY, FRONT	
3	X-4924-425-1	(C26)....PANEL ASSY, FRONT	
3	X-4924-426-1	(C20)....PANEL ASSY, FRONT	
4	4-922-921-01	BUTTON (POWER)	
5	7-685-134-19	SCREW,TOTSU BTP 2.6X8 TYPE2	
6	7-682-147-01	SCREW +BVTT 3X6 (S)	
7	4-926-334-01	BUTTON (T)	
8	4-926-331-01	BUTTON (P)	
9	4-926-332-01	BUTTON (A)	
10	4-926-333-01	BUTTON (O)	
11	*4-924-461-11	PLATE (F2), BOTTOM	
12	X-4924-422-1	FOOT ASSY (F5820S)	
13	X-4864-303-0	FOOT ASSY	
14	4-926-338-01	CASE	
15	3-704-366-21	SCREW (CASE) (M3X10)	
16	7-682-547-09	SCREW +BV 3X6, S TIGHT	

Ref.No	Part No.	Description	Remarks
17	*4-926-335-01	(C30)....PANEL, BACK (us)	
17	*4-926-335-51	(C30)....PANEL, BACK (Canadian)	
17	*4-926-335-11	(C26)....PANEL, BACK	
17	*4-926-335-21	(C20)....PANEL, BACK	
18	*3-703-244-00	BUSHING (2104), CORD	
19	3-531-576-11	RIVET	
20	*4-926-348-01	SHEET (INSULATING)	
21	2-383-566-00	SCREW	
22	*4-923-506-01	BRACKET (PC BOARD)	
901	*1-628-449-11	PC BOARD, POWER SW	
902	*1-628-448-11	PC BOARD, HEADPHONE	
903	*1-628-447-11	PC BOARD, TACT SW	
904	*1-628-393-11	PC BOARD, PINJACK	
905	*1-628-392-11	PC BOARD, POWER TRANSFORMER P	
906	⚠1-559-582-11	CORD, POWER	
CNJ401	1-566-921-11	JACK, PIN 2P (LINE OUT)	
T101	⚠1-449-024-11	TRANSFORMER, POWER	

REVISED

5-2. DISC TABLE SECTION

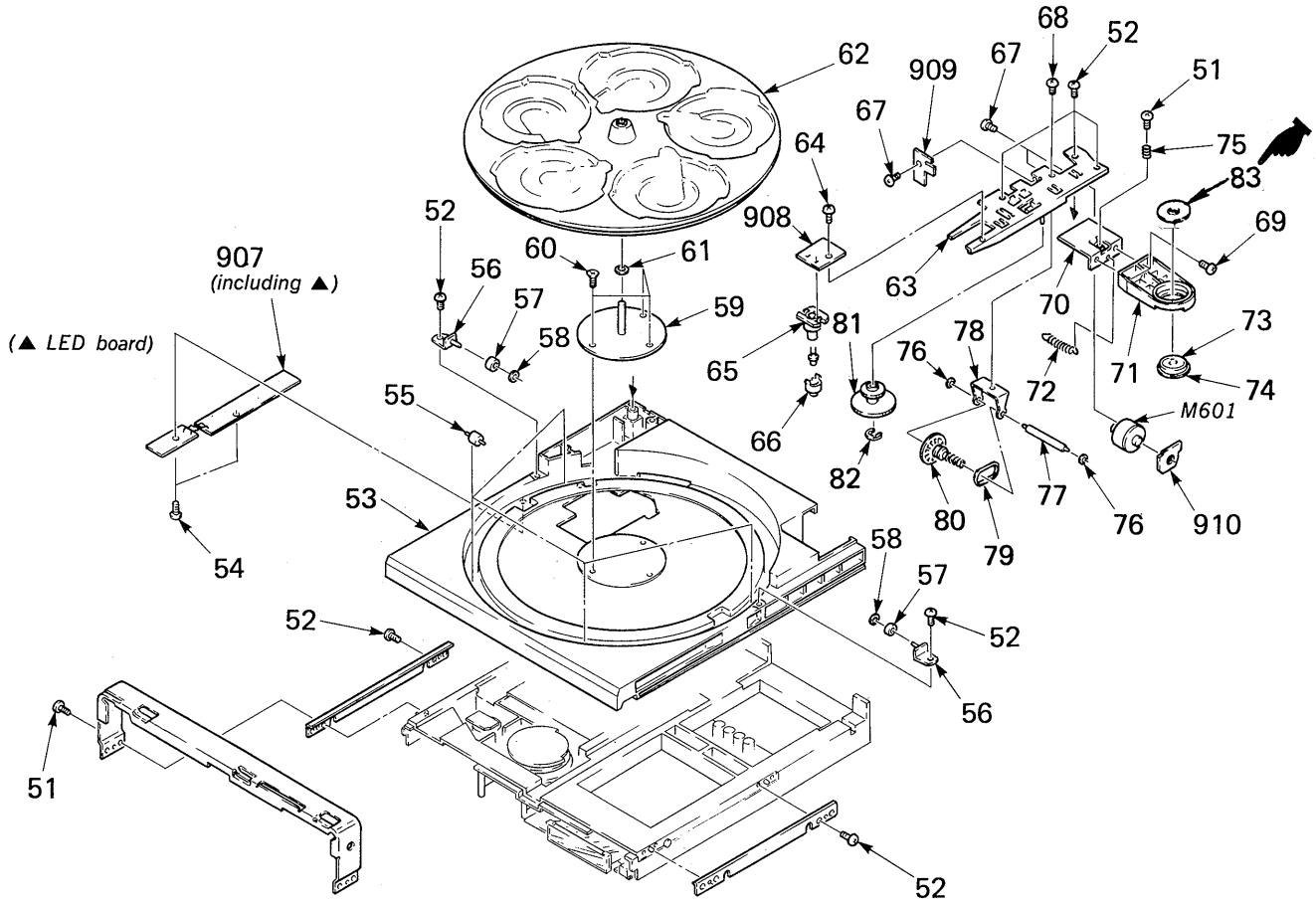

Ref.No	Part No.	Description	Remarks
51	7-685-648-79	SCREW +BTP 3X12 TYPE2 N-S	
52	7-685-647-79	SCREW +BVTP 3X10 TYPE2 N-S	
53	4-924-406-01	TABLE (A), DISK	
54	7-685-534-14	SCREW +BTP 2.6X8	
55	*X-4924-409-1	SHAFT (ROLLER B) ASSY	
56	*X-4924-410-1	BRACKET (ROLLER) ASSY	
57	*X-4924-408-3	COLLAR (ROLLER) ASSY	
58	3-325-290-21	WASHER, STOPPER	
59	*X-4924-402-1	BRACKET (A) ASSY	
60	7-685-134-19	SCREW,TOTSU BTP 2.6X8 TYPE2	
61	4-926-307-01	WASHER	
62	*4-924-405-01	TABLE (B), DISK	
63	*X-4924-423-1	BRACKET (R GEAR) ASSY	
64	7-621-770-87	SCREW +BVTT 2.6X5 (S)	
65	*4-924-409-01	HOLDER (A), LED	
66	*4-924-408-01	HOLDER (B), LED	
67	7-621-775-08	SCREW +P 2.6X3	
68	7-682-548-09	SCREW +B 3X8	
69	7-682-147-01	SCREW +BVTT 3X6 (S)	

Ref.No	Part No.	Description	Remarks
70	*4-926-328-01	BRACKET (ADJUSTMENT A)	
71	*4-926-326-01	BRACKET (PRESS PULLEY)	
72	4-924-421-01	SPRING (C), TENSION	
73	1-452-340-21	MAGNET	
74	*4-921-022-01	PULLEY, CHUCKING	
75	4-924-477-01	SPRING, COMPRESSION	
76	3-669-465-00	WASHER (1.5), STOPPER	
77	4-924-420-01	SHAFT (W)	
78	*4-924-424-01	BRACKET (WORM)	
79	4-917-548-02	BELT, DRIVING	
80	4-924-419-01	PULLEY (WORM)	
81	4-924-414-01	GEAR (WH)	
82	7-624-106-04	STOP RING 3.0, TYPE -E	
907	*1-625-967-11	PC BOARD, SENSOR (C)	
908	*1-628-439-11	PC BOARD, DISC LUMINUS	
909	*1-628-441-11	PC BOARD, PULSE COUNT	
910	*1-628-440-11	PC BOARD, TABLE MOTOR	
M601	A-4608-351-A	MOTOR ASSY, ROTARY	
83	4-921-029-01	YOKE, CHUCKING	

REVISED

5-3. FRAME SECTION

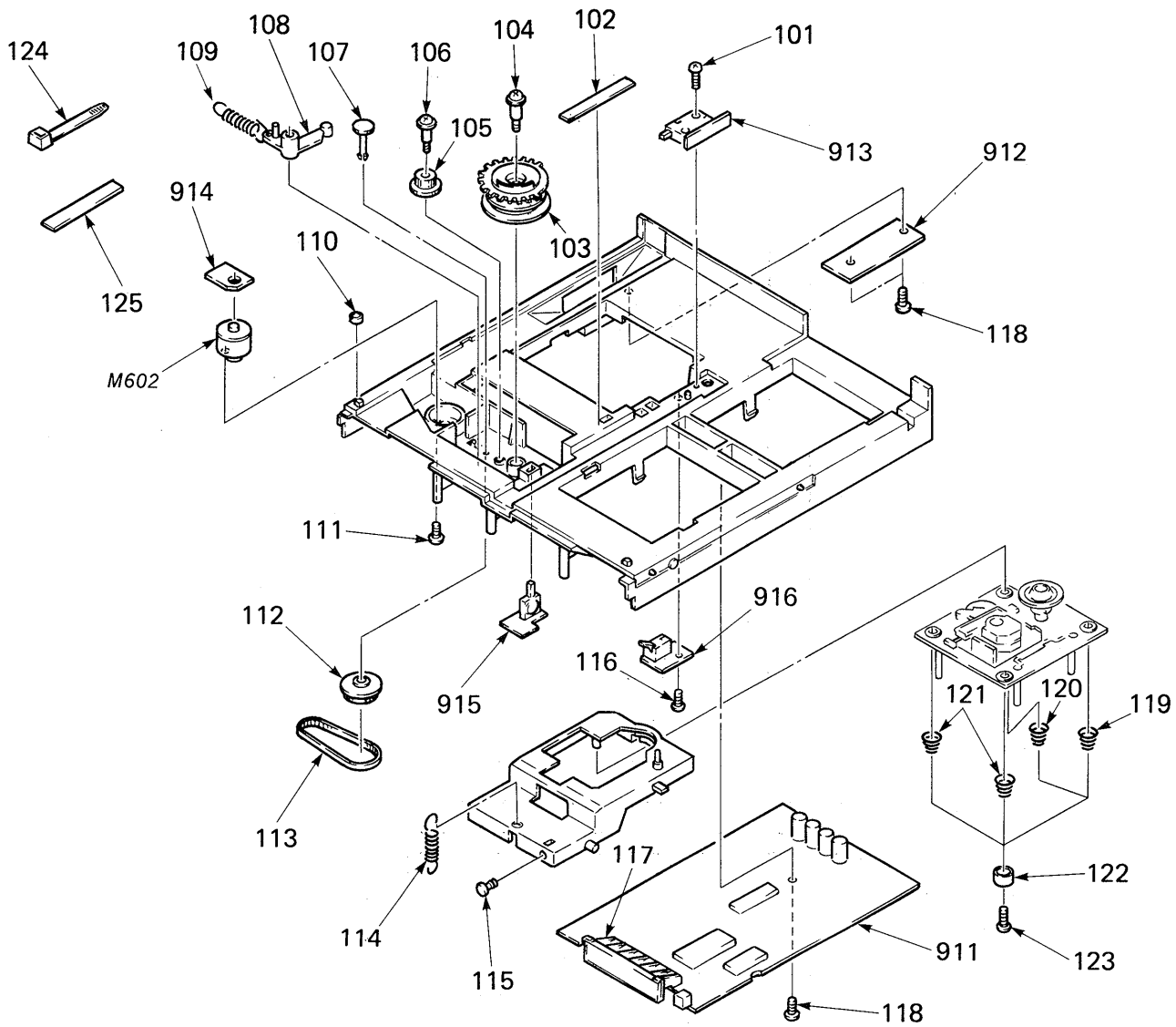

Ref.No	Part No.	Description	Remarks
101	7-685-137-19	SCREW +P 2.6X14 TYPE2 NON-SLIT	
102	*4-926-316-01	SHEET	
103	4-924-431-01	GEAR (LOADING A)	
104	4-926-317-01	SCREW, STEP	
105	4-924-426-01	GEAR (LOADING C)	
106	4-926-320-01	SCREW (B), STEP	
107	4-924-425-01	GEAR (LOADING B)	
108	4-917-519-01	LEVER, SET	
109	4-924-412-01	SPRING (B), TENSION	
110	*3-576-990-01	CUSHION	
111	7-628-254-00	+PSW, 2.6X5	
112	4-924-474-01	PULLEY (LOADING)	
113	4-924-478-01	BELT (TIMING)	
114	4-924-411-01	SPRING (A), TENSION	
115	4-917-515-01	ROLLER	
116	7-685-134-19	SCREW +P 2.6X8 TYPE2 NON-SLIT	
117	*4-926-324-01	BRACKET (FL)	
118	7-685-647-79	SCREW +BVTP 3X10 TYPE2 N-S	
119	4-917-541-01	SPRING (B)	
120	4-918-669-01	SPRING (W)	
121	4-917-507-01	SPRING (H)	
122	4-917-508-01	HOLDER, SP	
123	7-685-135-19	SCREW +P 2.6X10 TYPE2 NON-SLIT	
124	3-701-748-00	CLAMP	
125	3-831-441-XX	CUSHION (B), CABINET	
911	*A-4651-220-A	MOUNTED PCB, MAIN	
912	*1-628-446-11	PC BOARD, TRANSLATION	
913	*1-628-444-11	PC BOARD, LOADING SW	
914	*1-628-445-11	PC BOARD, LOADING MOTOR	
915	*1-628-442-11	PC BOARD, DOWN SW	
916	*1-628-443-12	PC BOARD, IN SW	
M602	A-4608-350-A	MOTOR ASSY, LOADING	

5-4. OPTICAL PICK-UP BLOCK (BU-5C)

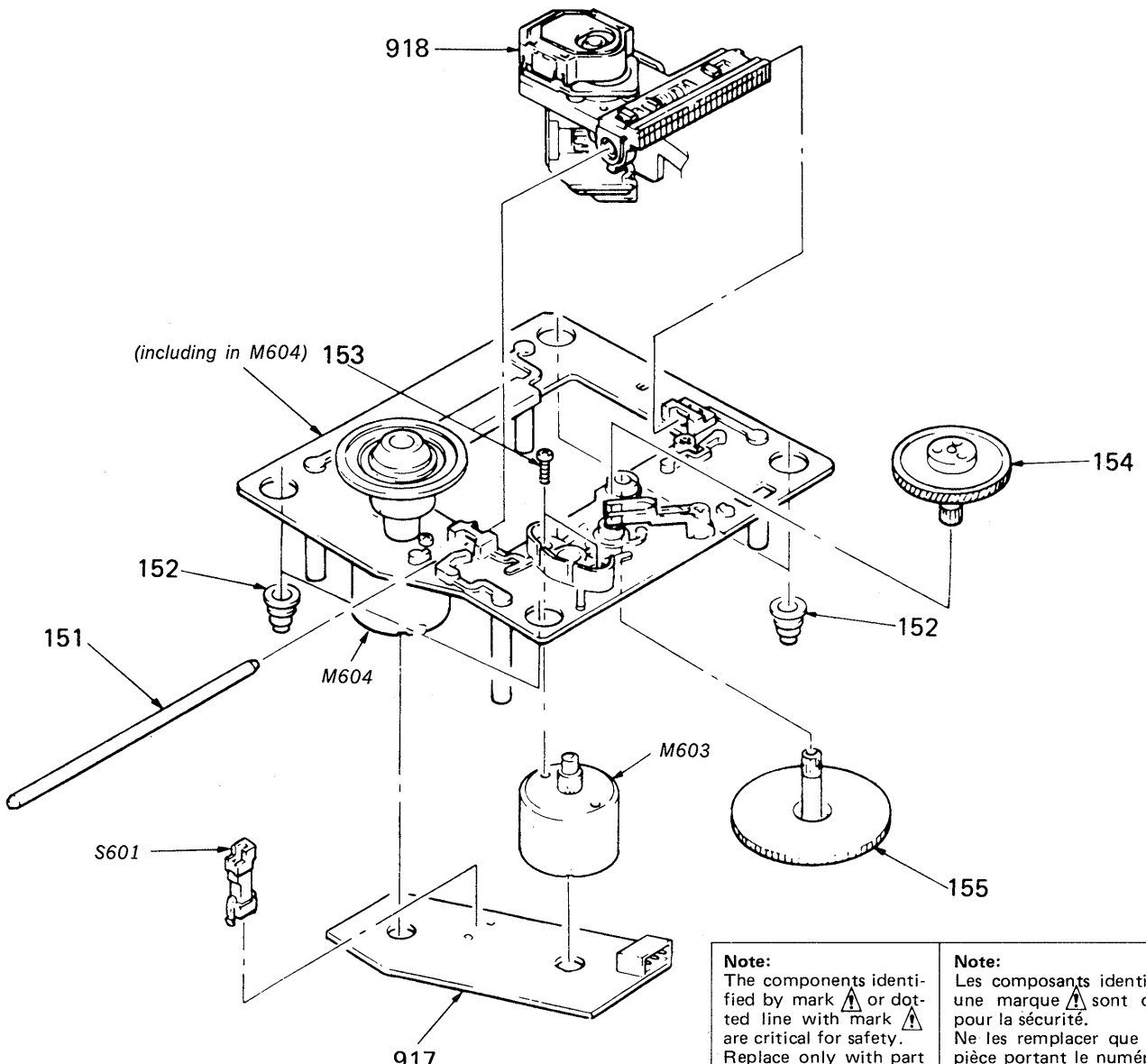

Note:	Note:
The components identified by mark ⚠ or dotted line with mark ⚠ are critical for safety. Replace only with part number specified.	Les composants identifiés par une marque ⚠ sont critiques pour la sécurité. Ne les remplacer que par une pièce portant le numéro spécifié.

Ref.No	Part No.	Description	Remarks
151	4-917-565-01	SHAFT, SLED	
152	4-917-562-01	INSULATOR	
153	7-621-255-15	SCREW +P 2X3	
154	4-917-567-01	GEAR (M)	
155	4-917-564-01	GEAR (P), FLATNESS	

Ref.No	Part No.	Description	Remarks
917	*1-626-304-11	PC BOARD, SL/SP MOTOR	
918	⚠8-848-062-01	DEVICE, OPTICAL	
M603	X-4917-504-1	ASSY, MOTER (SLED)	
M604	X-4917-523-1	ASSY, MOTER (SPINDLE)	
S601	1-571-274-11	SWITCH, LEAF (LIMIT IN)	

SECTION 6
ELECTRICAL PARTS LIST

NOTE:

- Due to standardization, replacements in the parts list may be different from the parts specified in the diagrams or the components used on the set.
- Items marked "★" are not stocked since they are seldom required for routine service. Some delay should be anticipated when ordering these items.
- If there are two or more same circuits in a set such as a stereophonic machine, only typical circuit parts may be indicated and capacitors and resistors in other same circuits may be omitted.

CAPACITORS:
MF: μF, PF: μμF.

RESISTORS
- All resistors are in ohms.
- F: nonflammable

COILS
- MMH: mH, UH: μH

SEMICONDUCTORS
In each case, U: μ, for example:
UA...: μA..., UPA...: μPA...,
UPC...: μPC, UPD...: μPD...

The components identified by mark ⚠ or dotted line with mark ⚠ are critical for safety.
Replace only with part number specified.

Les composants identifiés par une marque ⚠ sont critiques pour la sécurité.
Ne les remplacer que par une pièce portant le numéro spécifié.

Ref.No	Part No.	Description
901	*1-628-449-11	PC BOARD, POWER SW
902	*1-628-448-11	PC BOARD, HEADPHONE
903	*1-628-447-11	PC BOARD, TACT SW
904	*1-628-393-11	PC BOARD, PINJACK
905	*1-628-392-11	PC BOARD, POWER TRANSFORMER P
906	⚠1-559-582-11	CORD, POWER
907	*1-625-967-11	PC BOARD, SENSOR (C)
908	*1-628-439-11	PC BOARD, DISC LUMINUS
909	*1-628-441-11	PC BOARD, PULSE COUNT
910	*1-628-440-11	PC BOARD, TABLE MOTOR
911	*A-4651-220-A	MOUNTED PCB, MAIN
912	*1-628-446-11	PC BOARD, TRANSLATION
913	*1-628-444-11	PC BOARD, LOADING SW
914	*1-628-445-11	PC BOARD, LOADING MOTOR
915	*1-628-442-11	PC BOARD, DOWN SW
916	*1-628-443-12	PC BOARD, IN SW
917	*1-626-304-11	PC BOARD, SL/SP MOTOR
918	⚠8-848-062-01	DEVICE, OPTICAL

CAPACITOR

Ref.No	Part No.	Description			
C101	1-124-556-11	ELECT	2200MF	20%	16V
C102	1-124-556-11	ELECT	2200MF	20%	16V
C103	1-126-176-11	ELECT	220MF	20%	10V
C104	1-126-176-11	ELECT	220MF	20%	10V
C105	1-136-165-00	FILM	0.1MF	5%	50V
C106	1-136-165-00	FILM	0.1MF	5%	50V
C107	1-136-165-00	FILM	0.1MF	5%	50V
C108	1-136-165-00	FILM	0.1MF	5%	50V
C112	1-136-165-00	FILM	0.1MF	5%	50V
C114	1-124-925-11	ELECT	2.2MF	20%	50V
C201	1-126-233-11	ELECT	22MF	20%	50V
C202	1-136-159-00	FILM	0.033MF	5%	50V
C203	1-162-217-31	CERAMIC	56PF	5%	50V
C205	1-162-293-31	CERAMIC	820PF	10%	50V
C206	1-124-477-11	ELECT	47MF	20%	16V
C222	1-161-379-00	CERAMIC	0.01MF	30%	16V
C223	1-124-477-11	ELECT	47MF	20%	16V
C224	1-124-477-11	ELECT	47MF	20%	16V
C225	1-161-494-00	CERAMIC	0.022MF		25V
C226	1-124-477-11	ELECT	47MF	20%	16V
C227	1-161-494-00	CERAMIC	0.022MF		25V
C231	1-162-286-31	CERAMIC	220PF	10%	50V
C232	1-162-286-31	CERAMIC	220PF	10%	50V
C251	1-126-233-11	ELECT	22MF	20%	50V
C252	1-136-159-00	FILM	0.033MF	5%	50V
C253	1-162-217-31	CERAMIC	56PF	5%	50V
C255	1-162-293-31	CERAMIC	820PF	10%	50V
C256	1-124-477-11	ELECT	47MF	20%	16V
C302	1-124-477-11	ELECT	47MF	20%	16V
C303	1-161-375-00	CERAMIC	0.0022MF	30%	16V
C304	1-162-203-31	CERAMIC	15PF	5%	50V
C305	1-162-203-31	CERAMIC	15PF	5%	50V
C306	1-136-159-00	FILM	0.033MF	5%	50V
C307	1-161-377-00	CERAMIC	0.0047MF	30%	16V
C308	1-136-159-00	FILM	0.033MF	5%	50V
C309	1-136-153-00	FILM	0.01MF	5%	50V
C310	1-161-375-00	CERAMIC	0.0022MF	30%	16V
C311	1-124-477-11	ELECT	47MF	20%	16V
C312	1-124-477-11	ELECT	47MF	20%	16V
C313	1-161-375-00	CERAMIC	0.0022MF	30%	16V
C314	1-136-165-00	FILM	0.1MF	5%	50V
C315	1-136-159-00	FILM	0.033MF	5%	50V
C316	1-123-382-00	ELECT	3.3MF	20%	50V
C317	1-136-165-00	FILM	0.1MF	5%	50V
C320	1-123-875-11	ELECT	10MF	20%	50V
C322	1-136-169-00	FILM	0.22MF	5%	50V
C324	1-124-499-11	ELECT	1MF	20%	50V
C325	1-161-377-00	CERAMIC	0.0047MF	30%	16V
C326	1-124-927-11	ELECT	4.7MF	20%	50V
C327	1-124-499-11	ELECT	1MF	20%	50V
C328	1-124-477-11	ELECT	47MF	20%	16V
C329	1-161-375-00	CERAMIC	0.0022MF	30%	16V
C330	1-124-477-11	ELECT	47MF	20%	16V
C331	1-162-282-31	CERAMIC	100PF	10%	50V
C332	1-161-494-00	CERAMIC	0.022MF		25V
C333	1-161-494-00	CERAMIC	0.022MF		25V
C335	1-136-159-00	FILM	0.033MF	5%	50V
C336	1-124-902-00	ELECT	0.47MF	20%	50V
C337	1-161-379-00	CERAMIC	0.01MF	30%	16V
C338	1-124-902-00	ELECT	0.47MF	20%	50V
C339	1-124-477-11	ELECT	47MF	20%	16V
C340	1-124-477-11	ELECT	47MF	20%	16V
C342	1-162-207-31	CERAMIC	22PF	5%	50V
C343	1-162-207-31	CERAMIC	22PF	5%	50V
C348	1-124-477-11	ELECT	47MF	20%	16V
C349	1-124-477-11	ELECT	47MF	20%	16V
C350	1-161-379-00	CERAMIC	0.01MF	30%	16V
C360	1-161-375-00	CERAMIC	0.0022MF	30%	16V
C361	1-162-291-31	CERAMIC	560PF	10%	50V
C601	1-124-556-11	ELECT	2200MF	20%	16V
C602	1-124-556-11	ELECT	2200MF	20%	16V
C603	1-136-165-00	FILM	0.1MF	5%	50V
C604	1-124-911-11	ELECT	220MF	20%	50V
C605	1-136-165-00	FILM	0.1MF	5%	50V
C606	1-124-122-11	ELECT	100MF	20%	50V
C608	1-161-494-00	CERAMIC	0.022MF		25V
C609	1-161-494-00	CERAMIC	0.022MF		25V
C610	1-161-494-00	CERAMIC	0.022MF		25V
C611	1-124-477-11	ELECT	47MF	20%	16V
C613	1-124-477-11	ELECT	47MF	20%	16V
C614	1-162-290-31	CERAMIC	470PF	10%	50V
C615	1-162-290-31	CERAMIC	470PF	10%	50V
C616	1-162-290-31	CERAMIC	470PF	10%	50V
C617	1-161-494-00	CERAMIC	0.022MF		25V

Ref.No	Part No.	Description			
C618	1-136-165-00	FILM	0.1MF	5%	50V
C620	1-161-374-11	(EXCEPT FOR C26) ....CERAMIC	0.0015MF	20%	16V
C621	1-161-374-11	(EXCEPT FOR C26) ....CERAMIC	0.0015MF	20%	16V
C622	1-124-477-11	ELECT	47MF	20%	16V
C630	1-136-165-00	(EXCEPT FOR C26) ....FILM	0.1MF	5%	50V
C641	1-162-215-31	CERAMIC	47PF	5%	50V
C642	1-162-215-31	CERAMIC	47PF	5%	50V
C643	1-162-215-31	CERAMIC	47PF	5%	50V
C644	1-108-796-11	MYLAR	0.0022MF	5%	50V
C645	1-108-796-11	MYLAR	0.0022MF	5%	50V
CN601	*1-564-720-11	PIN, CONNECTOR (SMALL TYPE) 4P			
CNJ1	*1-564-710-11	PIN, CONNECTOR (SMALL TYPE) 8P			
CNJ2	*1-564-710-11	PIN, CONNECTOR (SMALL TYPE) 8P			
CNJ3	*1-564-706-11	PIN, CONNECTOR (SMALL TYPE) 4P			
CNJ4	*1-564-336-00	PIN, CONNECTOR 2P			
CNJ5	1-507-796-71	(EXCEPT FOR C26)....JACK, LARGE TYPE (HEADPHONES)			
CNJ8	*1-564-509-11	PLUG, CONNECTOR 6P			
CNJ101	*1-564-499-11	PIN, CONNECTOR 6P			
CNJ202	*1-564-506-11	PLUG, CONNECTOR 3P			
CNJ401	1-566-921-11	JACK, PIN 2P (LINE OUT)			
CNJ605	*1-564-340-61	PIN, CONNECTOR 6P			
CNJ606	*1-564-336-61	PIN, CONNECTOR 2P			
CNJ607	*1-564-337-71	PIN, CONNECTOR 3P			
CNJ608	*1-564-336-81	PIN, CONNECTOR 2P			
CNJ614	*1-564-708-11	PIN, CONNECTOR (SMALL TYPE) 6P			
CNJ701	*1-564-499-11	PIN, CONNECTOR 6P			
CNJ862	*1-564-337-00	PIN, CONNECTOR 3P			
D1	8-719-200-77	DIODE 10E2N			
D2	8-719-200-77	DIODE 10E2N			
D3	8-719-200-77	DIODE 10E2N			
D4	8-719-200-77	DIODE 10E2N			
D11	8-719-000-26	DIODE US1060M			
D601	8-719-109-98	DIODE RD6.8ES-B3			
D602	8-719-200-77	DIODE 10E2N			
D604	8-719-000-26	DIODE US1060M			
D605	8-719-200-77	DIODE 10E2N			
D606	8-719-000-26	DIODE US1060M			
D607	8-719-950-62	DIODE SRA-989A-1			
D608	8-719-000-26	DIODE US1060M			
D609	8-719-109-98	DIODE RD6.8ES-B3			
D610	8-719-000-26	DIODE US1060M			
D611	8-719-000-26	DIODE US1060M			
D613	8-719-970-19	DIODE GP-1A521			
D615	8-719-000-26	DIODE US1060M			
FL1	1-519-477-11	INDICATOR TUBE, FLUORESCENT			
IC1	8-752-031-80	IC CXA1081S			
IC2	8-752-032-33	IC CXA1182S			
IC3	8-759-947-03	IC CXD1130Q			
IC8	8-759-972-49	IC MSM6408-32SS			
IC9	8-759-631-40	IC M5294P			
IC10	8-759-142-66	IC UPD75208 CW-232			
IC11	8-752-035-28	IC CXA1291P			
IC12	8-752-035-28	IC CXA1291P			
IC15	8-752-320-44	IC CXK5816M-10L			
IC201	8-759-805-35	IC CXD1161P-2			
IC202	8-759-631-39	IC M5204P			
IC605	8-719-945-83	PHOTO INTERRUPTER GP-1A51HR			
L101	⚠1-421-915-11	COIL, LINE FILTER			

Note:
The components identified by mark ⚠ or dotted line with mark ⚠ are critical for safety. Replace only with part number specified.

Note:
Les composants identifiés par une marque ⚠ sont critiques pour la sécurité. Ne les remplacer que par une pièce portant le numéro spécifié.

Ref.No	Part No.	Description
M601	A-4608-351-A	MOTOR ASSY, ROTARY
M602	A-4608-350-A	MOTOR ASSY, LOADING
M603	X-4917-504-1	ASSY, MOTOR (SLED)
M604	X-4917-523-1	ASSY, MOTOR (SPINDLE)
Q3	8-729-801-83	TRANSISTOR 2SB1013
Q7	8-729-900-80	TRANSISTOR DTC114ES
Q8	8-729-900-65	TRANSISTOR DTA144ES
Q16	8-729-900-36	TRANSISTOR DTC124ES
Q20	8-749-920-53	IC GP1U52A
Q201	8-729-107-77	TRANSISTOR 2SC3623-L
Q221	8-729-115-12	TRANSISTOR BN1L4M
Q251	8-729-107-77	TRANSISTOR 2SC3623-L
Q601	8-729-117-54	TRANSISTOR 2SA1175
Q602	8-729-173-13	TRANSISTOR 2SB731
Q603	8-729-900-80	TRANSISTOR DTC114ES
Q604	8-729-900-65	TRANSISTOR DTA144ES
Q606	8-729-904-10	(PHOTO) TRANSISTOR PT360FS

RESISTOR

R201	1-249-435-11	CARBON	33K	5%	1/4W
R202	1-249-417-11	CARBON	1K	5%	1/4W
R203	1-249-413-11	CARBON	470	5%	1/4W
R204	1-249-425-11	CARBON	4.7K	5%	1/4W
R205	1-247-872-11	CARBON	51K	5%	1/4W
R206	1-249-441-11	CARBON	100K	5%	1/4W
R207	1-249-417-11	CARBON	1K	5%	1/4W
R209	1-247-903-00	CARBON	1M	5%	1/4W
R221	1-249-441-11	CARBON	100K	5%	1/4W
R222	1-249-417-11	CARBON	1K	5%	1/4W
R251	1-249-435-11	CARBON	33K	5%	1/4W
R252	1-249-417-11	CARBON	1K	5%	1/4W
R253	1-249-413-11	CARBON	470	5%	1/4W
R254	1-249-425-11	CARBON	4.7K	5%	1/4W
R255	1-247-872-11	CARBON	51K	5%	1/4W
R256	1-249-441-11	CARBON	100K	5%	1/4W
R257	1-249-417-11	CARBON	1K	5%	1/4W
R259	1-247-903-00	CARBON	1M	5%	1/4W
R301	1-247-864-11	CARBON	24K	5%	1/4W
R302	1-249-433-11	CARBON	22K	5%	1/4W
R303	1-249-431-11	CARBON	15K	5%	1/4W
R304	1-249-431-11	CARBON	15K	5%	1/4W
R305	1-249-425-11	CARBON	4.7K	5%	1/4W
R306	1-249-417-11	CARBON	1K	5%	1/4W
R307	1-249-397-11	CARBON	22	5%	1/4W
R308	1-249-405-11	CARBON	100	5%	1/4W
R309	1-249-425-11	CARBON	4.7K	5%	1/4W
R310	1-247-882-11	CARBON	130K	5%	1/4W
R311	1-247-889-00	CARBON	270K	5%	1/4W
R312	1-249-435-11	CARBON	33K	5%	1/4W
R313	1-249-440-11	CARBON	82K	5%	1/4W
R314	1-249-425-11	CARBON	4.7K	5%	1/4W
R315	1-249-423-11	CARBON	3.3K	5%	1/4W
R316	1-249-437-11	CARBON	47K	5%	1/4W
R317	1-249-435-11	CARBON	33K	5%	1/4W
R320	1-247-883-00	CARBON	150K	5%	1/4W
R321	1-247-882-11	CARBON	130K	5%	1/4W
R322	1-247-883-00	CARBON	150K	5%	1/4W
R323	1-247-881-00	CARBON	120K	5%	1/4W
R325	1-247-896-11	CARBON	510K	5%	1/4W
R326	1-249-414-11	CARBON	560	5%	1/4W
R327	1-249-433-11	CARBON	22K	5%	1/4W
R328	1-249-429-11	CARBON	10K	5%	1/4W
R329	1-249-441-11	CARBON	100K	5%	1/4W
R330	1-215-434-00	METAL	3.6K	1%	1/6W
R331	1-249-441-11	CARBON	100K	5%	1/4W

Ref.No	Part No.	Description			
R332	1-247-903-00	CARBON	1M	5%	1/4W
R333	1-249-434-11	CARBON	27K	5%	1/4W
R334	1-249-429-11	CARBON	10K	5%	1/4W
R335	1-249-441-11	CARBON	100K	5%	1/4W
R336	1-249-441-11	CARBON	100K	5%	1/4W
R337	1-215-469-00	METAL	100K	1%	1/6W
R338	1-215-469-00	METAL	100K	1%	1/6W
R341	1-249-429-11	CARBON	10K	5%	1/4W
R342	1-249-417-11	CARBON	1K	5%	1/4W
R343	1-249-417-11	CARBON	1K	5%	1/4W
R351	1-249-417-11	CARBON	1K	5%	1/4W
R352	1-249-417-11	CARBON	1K	5%	1/4W
R360	1-249-424-11	CARBON	3.9K	5%	1/4W
R361	1-249-438-11	CARBON	56K	5%	1/4W
R370	1-249-417-11	CARBON	1K	5%	1/4W
R390	1-249-432-11	CARBON	18K	5%	1/4W
R391	1-249-432-11	CARBON	18K	5%	1/4W
R604	1-249-424-11	CARBON	3.9K	5%	1/4W
R605	1-249-417-11	CARBON	1K	5%	1/4W
R606	1-247-850-11	CARBON	6.2K	5%	1/4W
R607	1-249-416-11	CARBON	820	5%	1/4W
R609	1-249-439-11	CARBON	68K	5%	1/4W
R610	1-247-881-00	CARBON	120K	5%	1/4W
R611	1-247-883-00	CARBON	150K	5%	1/4W
R612	1-247-882-11	CARBON	130K	5%	1/4W
R613	1-247-883-00	CARBON	150K	5%	1/4W
R615	1-249-436-11	CARBON	39K	5%	1/4W
R616	1-249-435-11	CARBON	33K	5%	1/4W
R617	1-249-417-11	CARBON	1K	5%	1/4W
R618	1-249-417-11	CARBON	1K	5%	1/4W
R619	1-249-429-11	CARBON	10K	5%	1/4W
R620	1-249-416-11	CARBON	820	5%	1/4W
R621	1-249-406-11	CARBON	120	5%	1/4W
R622	1-249-429-11	CARBON	10K	5%	1/4W
R623	1-249-433-11	CARBON	22K	5%	1/4W
R624	1-249-433-11	CARBON	22K	5%	1/4W
R625	1-249-433-11	CARBON	22K	5%	1/4W
R626	1-249-433-11	CARBON	22K	5%	1/4W
R628	1-249-441-11	CARBON	100K	5%	1/4W
R629	1-249-441-11	CARBON	100K	5%	1/4W
R637	1-249-402-11	(EXCEPT FOR C26)....CARBON	56	5%	1/4W
R638	1-249-402-11	(EXCEPT FOR C26)....CARBON	56	5%	1/4W
R638A	1-249-429-11	CARBON	10K	5%	1/4W
R639	1-249-429-11	CARBON	10K	5%	1/4W
R640	1-249-429-11	CARBON	10K	5%	1/4W
R641	1-249-429-11	CARBON	10K	5%	1/4W
R642	1-249-439-11	CARBON	68K	5%	1/4W
R643	1-249-433-11	CARBON	22K	5%	1/4W
R645	1-249-417-11	CARBON	1K	5%	1/4W
R661	1-249-429-11	CARBON	10K	5%	1/4W
R662	1-249-429-11	CARBON	10K	5%	1/4W
R663	1-249-429-11	CARBON	10K	5%	1/4W
RV1	1-228-995-00	RES, ADJ, CARBON 22K			
RV2	1-228-993-00	RES, ADJ, CARBON 4.7K			
RV3	1-228-995-00	RES, ADJ, CARBON 22K			
RV4	1-228-995-00	RES, ADJ, CARBON 22K			
RV5	1-228-990-00	RES, ADJ, METAL GLAZE 1K			
RV6	1-238-302-11	(EXCEPT FOR C26)....RES, VAR, CARBON 1K/1K (PHONE LEVEL)			
S1	1-554-596-21	SWITCH, KEY BOARD (⏏ OPEN/CLOSE)			
S2	1-554-596-21	SWITCH, KEY BOARD (DISC SKIP)			
S3	1-554-596-21	SWITCH, KEY BOARD (⏮)			
S4	1-554-596-21	SWITCH, KEY BOARD (PROGRAM)			

Ref.No	Part No.	Description
S5	1-554-596-21	SWITCH, KEY BOARD (▶▶I)
S6	1-554-596-21	SWITCH, KEY BOARD (▶II)
S7	1-554-596-21	SWITCH, KEY BOARD (■)
S8	1-554-596-21	SWITCH, KEY BOARD (SHUFFLE)
S9	1-554-596-21	SWITCH, KEY BOARD (TIME)
S101	⚠1-571-305-11	SWITCH, PUSH (1 KEY) (POWER)
S601	1-571-274-11	SWITCH, LEAF (LIMIT IN)
SW103	1-571-677-11	SWITCH, PUSH (1 KEY) (CLOSE SW)
SW104	1-571-300-11	SWITCH, ROTARY (UP/OPEN SW)
SW105	1-571-453-11	SWITCH, LEVER SLIDE (DOWN SW)
T101	⚠1-449-024-11	TRANSFORMER, POWER
X601	1-567-686-11	OSCILLATOR, CERAMIC (4MHz)
X602	1-567-768-21	VIBRATOR, CRYSTAL (8MHz)

ACCESSORY & PACKING MATERIAL

1-559-533-11	CORD, CONNECTION
1-465-078-11	(EXCEPT FOR C20)....REMOTE COMMANDER (RM-D35)
3-703-710-41	STICKER, SONY SYMBOL (12)
*3-704-217-01	LABEL
*3-704-346-01	SHEET (STANDARD), PROTECTION
3-786-537-21	MANUAL, INSTRUCTION
3-786-537-31	(canadian)....MANUAL, INSTRUCTION
*4-924-418-01	PLATE (TRANSPORT), LOCK
*4-926-344-01	CUSHION (LEFT)
*4-926-345-01	CUSHION (RIGHT)
*4-926-346-01	INDIVIDUAL CARTON

Note:
The components identified by mark ⚠ or dotted line with mark ⚠ are critical for safety. Replace only with part number specified.

Note:
Les composants identifiés par une marque ⚠ sont critiques pour la sécurité. Ne les remplacer que par une pièce portant le numéro spécifié.

9-953-441-12
(Including 9-953-441-91)

Sony Corporation
Audio Group

Englih
89A04035-1
Printed in Japan
© 1989.1
Published by A/V Engineering Service Dept.

CDP-C20/C26/C30

SONY®

SERVICE MANUAL

US Model
CDP-C20/C26/C30

Canadian Model
CDP-C30

REVISED

SUPPLEMENT-1

File this supplement with the service manual.

Subject: Alteration for pattern of MAIN board and added for WIND SENSOR board

1. AS TO CHANGED PARTS

Added parts

- WIND SENSOR BOARD

	*1-629-107-11	PC BOARD, WIND SENSOR			
C1001	1-136-165-00	FILM	0.1MF	5%	50V
C1002	1-123-875-11	ELECT	10MF	20%	50V
CNJ1001	*1-564-508-11	PLUG, CONNECTOR 5P			
D1001	8-719-000-26	DIODE US1060M			
D1002	8-719-000-26	DIODE US1060M			
IC1001	8-759-202-24	IC TC74HC86P			
R1001	1-247-895-00	CARBON	470K	5%	1/4W

- MAIN BOARD

Q701	8-729-115-27	TRANSISTOR BN1L3Z
Q702	8-729-115-77	TRANSISTOR BA1L4M

Deleted parts

MAIN BOARD

C105	FILM	0.1MF	5%	50V
C106	FILM	0.1MF	5%	50V
C107	FILM	0.1MF	5%	50V
C108	FILM	0.1MF	5%	50V
C603	FILM	0.1MF	5%	50V

2. AS TO ALTERATION OF IC10

Alterationed for repair part of IC10.

	Former type	New type
IC10 (Part No.)	μPD75208-CW-232 (8-759-142-66)	μPD75208-CW-257 (8-759-144-54)

Occur to exchange at new type for former type IC10, certainly remove the connector CNJ1001 of WIND SENSOR board.

• Waveforms

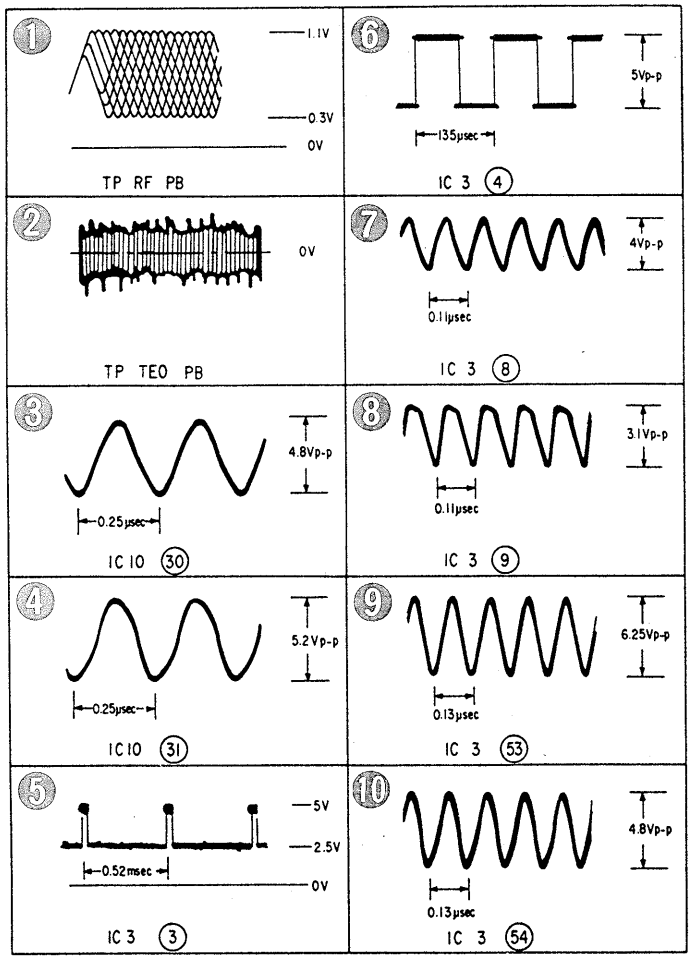

Note:

- All capacitors are in μF unless otherwise noted. pF: μμF 50WV or less are not indicated except for electrolytics and tantalums.
- All resistors are in Ω and ¼W or less unless otherwise specified.
- △ : internal component.
- ▭ : adjustment for repair.
- Voltage and waveforms are dc with respect to ground under no-signal conditions.
  no mark : PLAY
- Voltages are taken with a VOM (50 kΩ/V).
  Voltage variations may be noted due to normal production tolerances.
- Waveforms are taken with a oscilloscope.
  Voltage variations may be noted due to normal production tolerances.
- Circled numbers refer to waveforms.
- Signal path.
  ⇨ : CD

PRINTED WIRING BOARDS

● Semiconductor Location

Ref. No.	Location	Ref. No.	Location
D1	H-22	Q3	I-14
D2	G-22	Q7	C-15
D3	F-21	Q8	C-14
D4	F-21	Q16	E-11
D11	I-15	Q20	A-8
D601	F-10	Q201	C-20
D602	F-21	Q221	A-19
D604	G-20	Q251	A-22
D605	E-21	Q601	D-22
D606	H-9	Q602	D-22
D608	E-13	Q603	F-13
D609	D-21	Q604	I-9
D610	B-9	Q701	F-9
D611	B-9	Q702	F-10
D615	B-8		
D1001	G-3		
D1002	G-3		
IC1	H-17		
IC2	E-15		
IC3	C-18		
IC8	B-12		
IC9	H-20		
IC10	D-11		
IC11	I-10		
IC12	H-12		
IC15	C-19		
IC201	A-18		
IC202	A-20		
IC1001	G-2		

【WIND SENSOR BOARD】

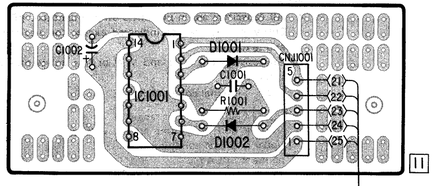

【MAIN BOARD】

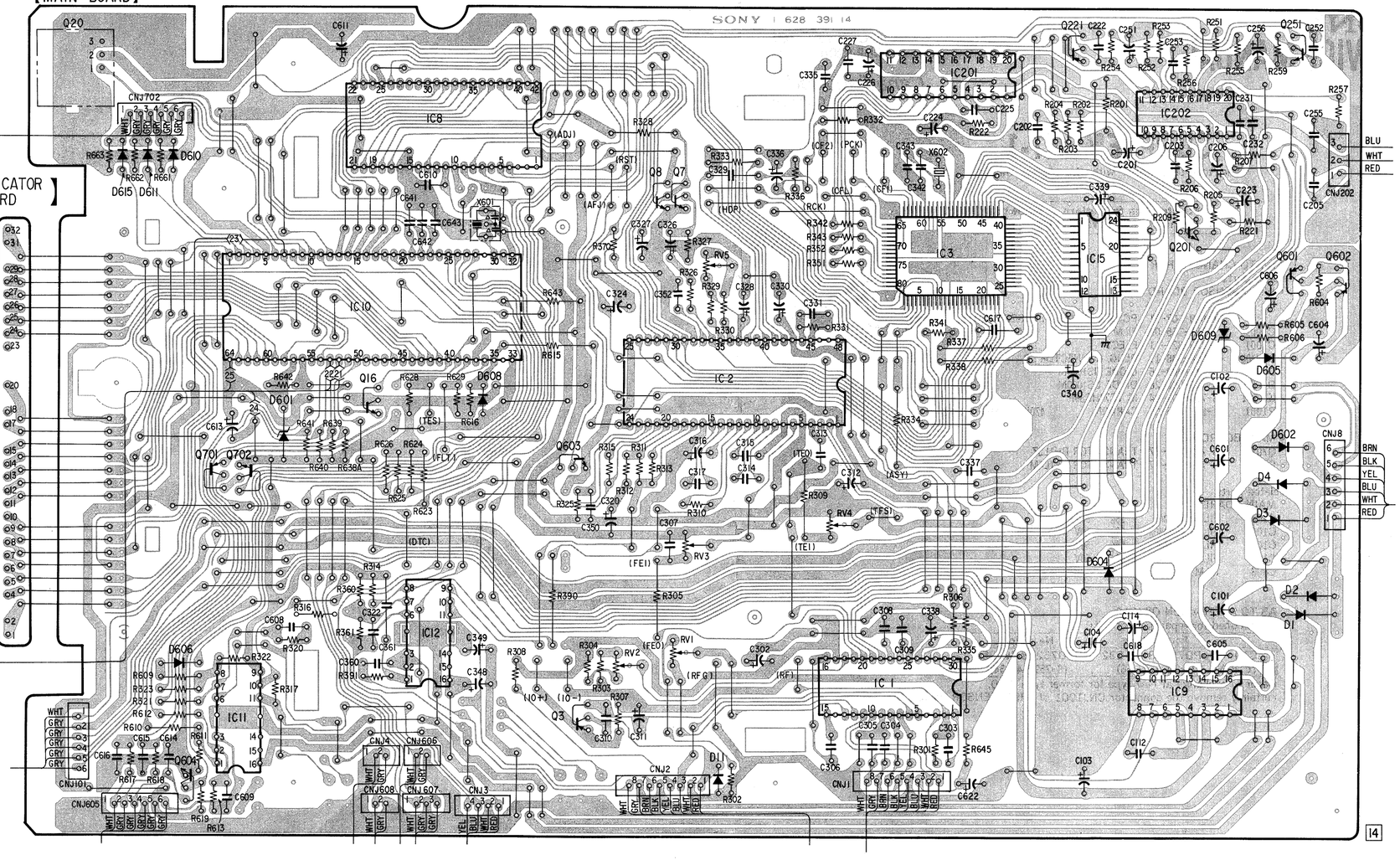

【INDICATOR BOARD】

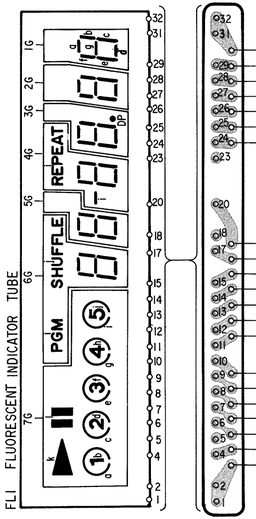

Note:

- ○—— : parts extracted from the component side.
- ⬚ indicates side identified with part number.
- ○—●— : Jumper wire connected to the ground pattern on the component side.

SCHEMATIC DIAGRAM

- Refer to page 3 for note and waveforms.

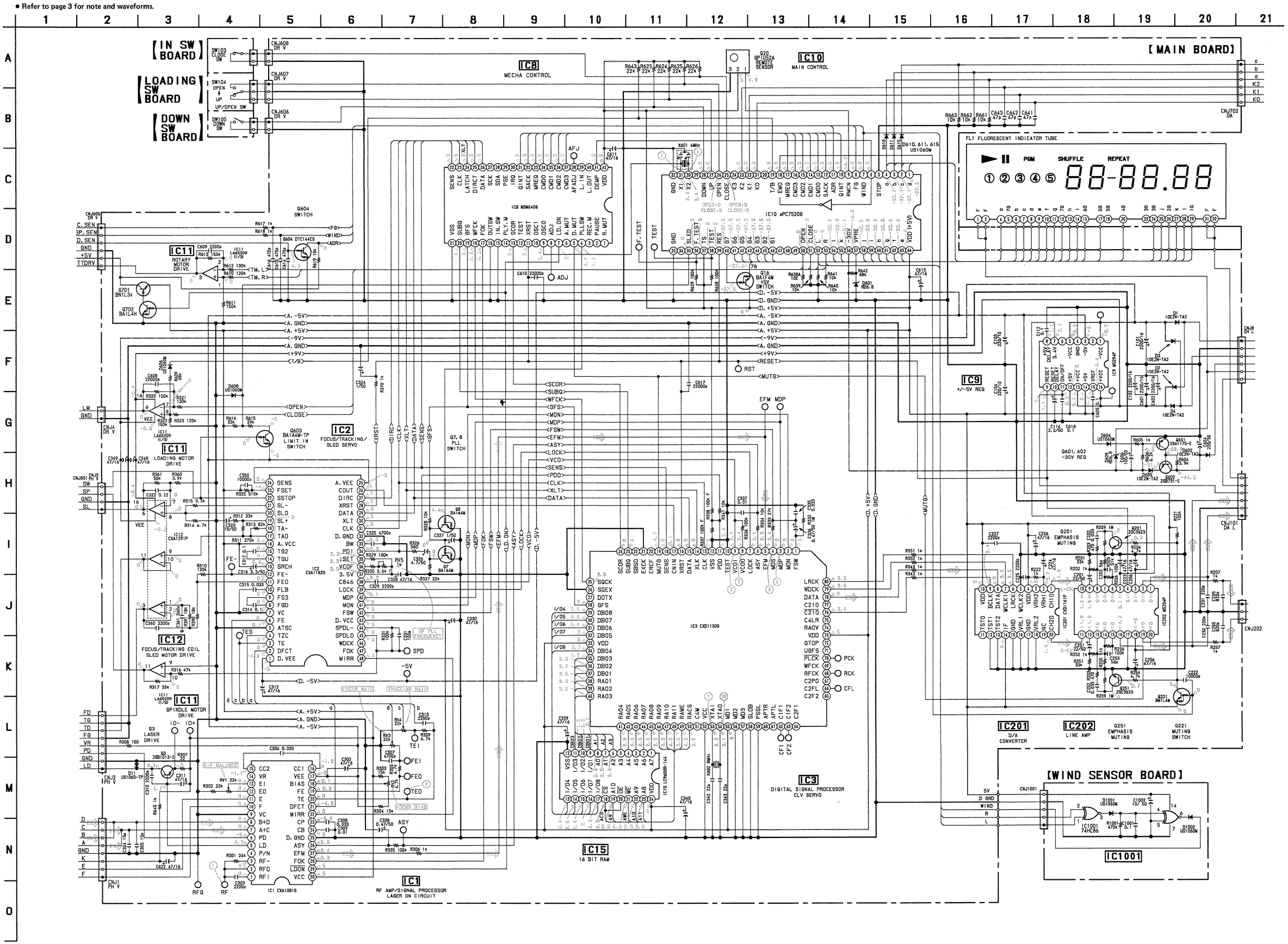

English
89B0431-1
Printed in Japan
©1989. 2

9-953-441-81

Sony Corporation
Audio Group

Published by A/V Engineering Service Dept.

CDP-C20/C26/C30

SONY®
SERVICE MANUAL

US Model
CDP-C20/C26/C30
Canadian Model
CDP-C30

SUPPLEMENT -2

File this supplement with the service manual.

1. MAIN board modification. (See page 2.)
CDP-C20 (US model) : Serial No. 851929 and later.
CDP-C30 (US model) : Serial No. 849101 and later.

2. WIND SENSOR board modification. (See page 3.)
CDP-C30 (US model) : Serial No. 855101 to 859100.
CDP-C30 (Canadian model) : Serial No. 700001 to 701000.

3. TABLE board is added. (See page 4.)
CDP-C20 (US model) : Serial No. 860001 and later.
CDP-C30 (US model) : Serial No. 859101 and later.

ADDED PARTS

Ref. No.	Part No.	Description
	*1-630-550-11	PC BOARD, TABLE
	*1-629-107-11	PC BOARD, WIND SENSOR
C1101	1-124-907-11	ELECT 10MF 20% 50V
D1101	8-719-000-26	DIODE US1060M
Q1101	8-729-115-77	TRANSISTOR BA1L4M
Q1102	8-729-900-65	TRANSISTOR DTA144ES
Q1103	8-729-900-65	TRANSISTOR DTA144ES
R1101	1-247-874-11	CARBON 62K 5% 1/4W

1. **MAIN board modification.**

☛ : added portion.

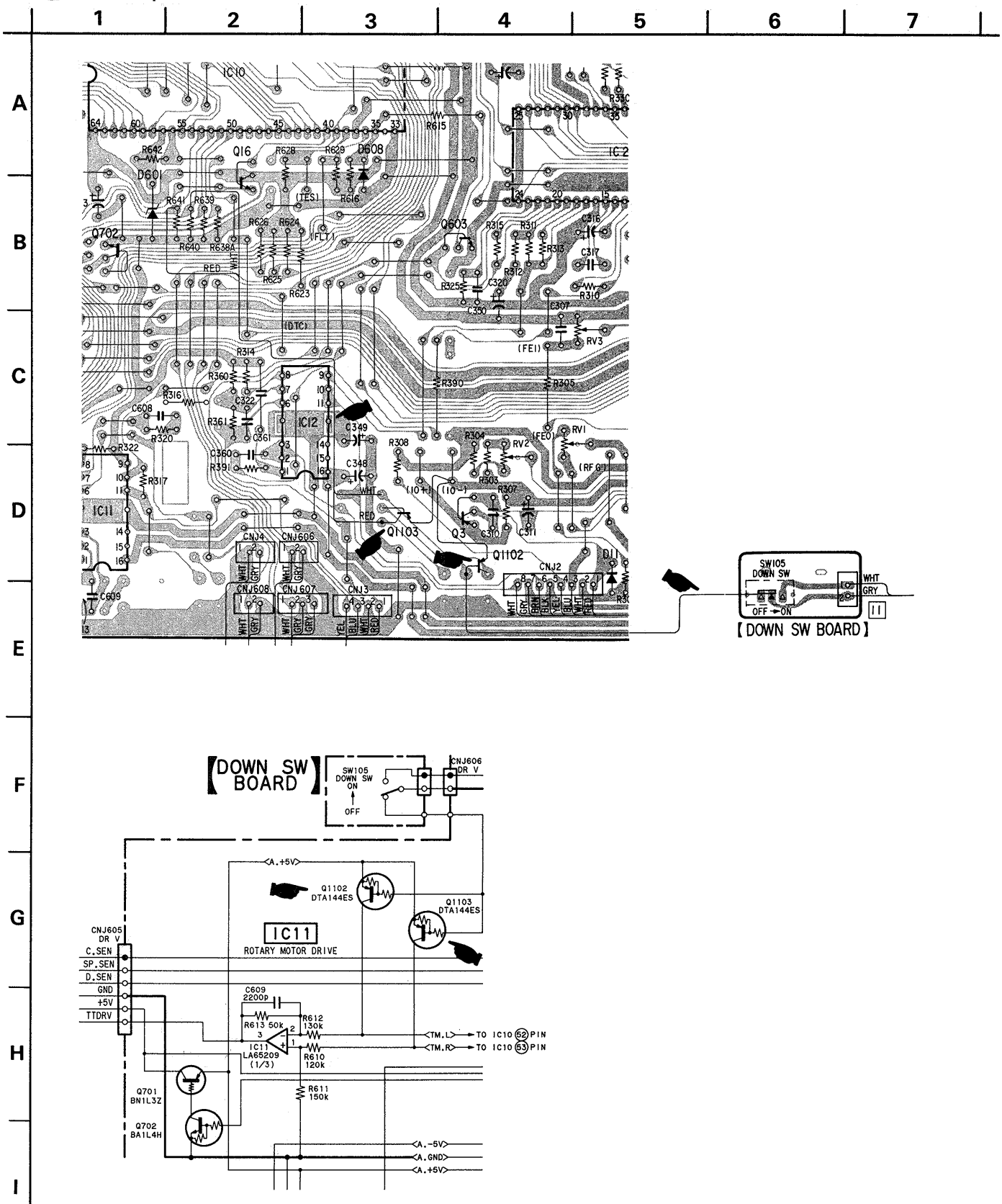

2. WIND SENSOR board modification.

: added portion.

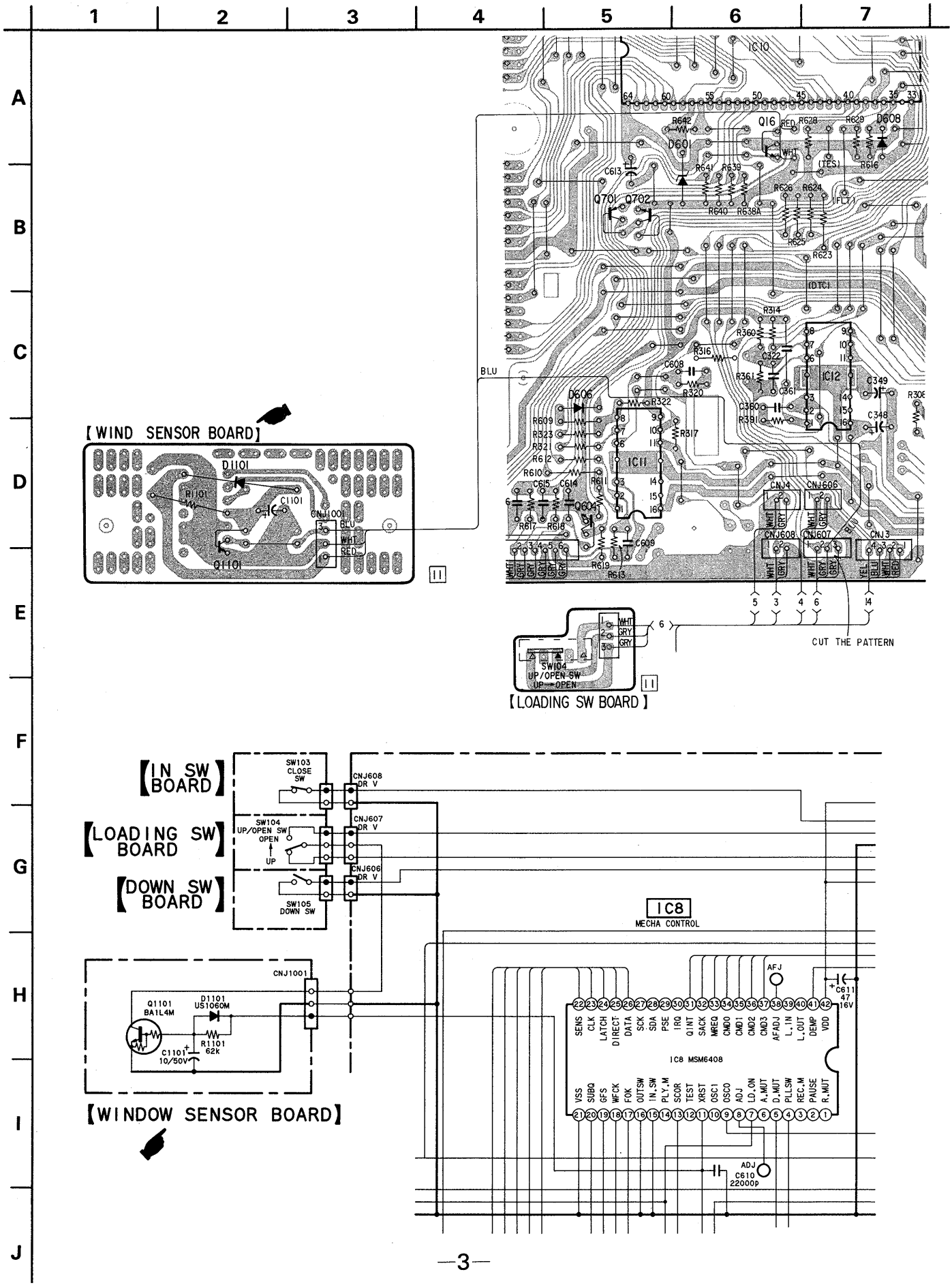

3. **TABLE board is added.**

: added portion.

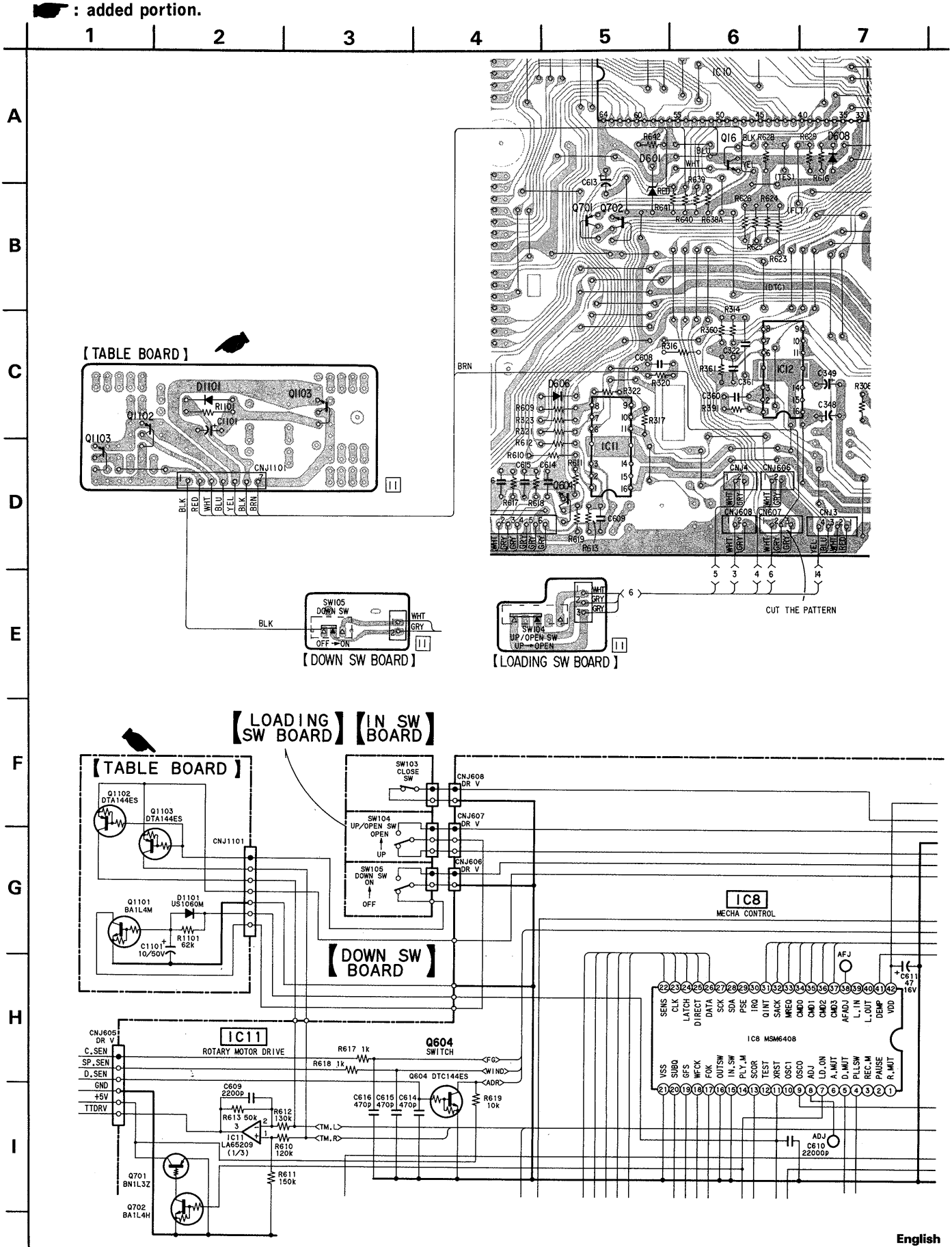

© 1991. 12

Published by Customer Relations and Service Group